Service Manual

Panasonic MII

PORTABLE VTR

AU-55HE

Sec. 1 *Operating Instructions*

Sec. 2 *Maintenance & Mechanical Adjustment Procedures*

Sec. 3 *Electrical Adjustment Procedures*

Sec. 4 *Block Diagrams, Schematic Diagrams & Circuit Board Diagrams*

Sec. 5 *Exploded Views & Replacement Parts List*

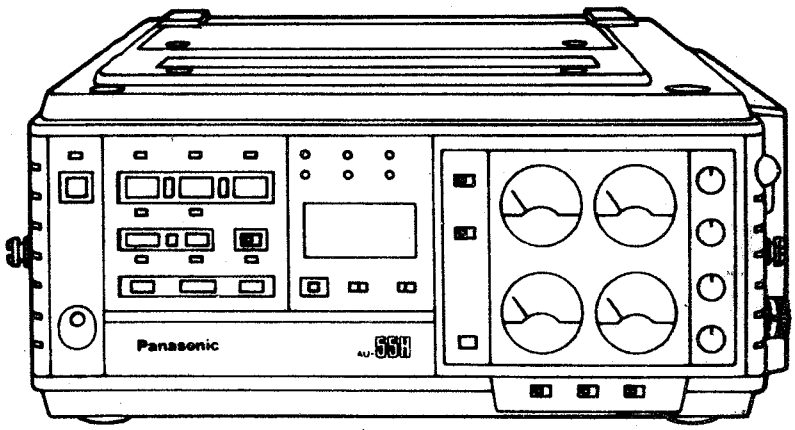

PAL

Panasonic

INTRODUCTION

This service manual contains technical information which will allow service personnels to understand and service the Panasonic Potable VTR model AU-55.

This service manual includes the following sections.

Section 1	Operating Instructions
Section 2	Maintenance / Mechanical Adjustment Procedures
Section 3	Electrical Adjustment Procedures
Section 4	Block / Schematic / Circuit Board Diagrams
Section 5	Exploded Views / Replacement Parts Lists

If the part or circuit is changed or modified, this information will be followed by supplementary service manual to be filed with original manual.

SECTION 4

BLOCK DIAGRAMS
SCHEMATIC DIAGRAMS
CIRCUIT BOARD DIAGRAMS

This section provides the block diagrams, schematic diagrams and printed circuit boards.

Note:

1. Do not use the part numbers shown on the schematic diagram or P.C.Board layout for ordering.
   The correct part number for ordering is shown in the Exploded View/Parts List section.
2. Unless otherwise specified, all resistors are in 0HMS, K = 1,000 0HMS, all capacitors are in MICROFARADS (μF), P = μμF.
3. The foil patterns on the P.C.Board layout, printed with the blue color is the component side.
4. Please refer to the Electrical Parts List for the value and existence of component parts on the P.C.Board.

CONTENTS

BLOCK DIAGRAMS

OVERALL BLK-1
DECODER & CTCM BLK-2
VIDEO 1 ..... BLK-6
VIDEO 2 ..... BLK-8
VIDEO 3 ..... BLK-10
VIDEO 4 ..... BLK-12
AUDIO BLK-14
VIDEO JACK BLK-16
VOLUME BLK-16
AUDIO I/O BLK-17
MONITOR/MONITOR VR/HEADPHONES BLK-17
SERVO BLK-18
FRONT/METER/METER SELECT BLK-20
DRIVER BLK-21
SYSTEM CONTROL & TC BLK-22
POWER SUPPLY BLK-25

SCHEMATIC DIAGRAMS

INTERCONNECTION SCM-1
DECODER & CTCM SCM-3
VIDEO 1 ..... SCM-7
VIDEO 2 ..... SCM-9
VIDEO 3 ..... SCM-11
VIDEO 4 ..... SCM-13
VIDEO MOTHER SCM-17
AUDIO MOTHER SCM-17
VOLUME SCM-17
AUDIO I/O SCM-18
MONITOR VR SCM-18
HEADPHONES SCM-18
MONITOR SCM-18
AUDIO SCM-19
METER SELECT SCM-20
METER SCM-20
SERVO SCM-21
SYSTEM CONTROL & TC SCM-23
DRIVER SCM-26
FRONT SCM-27
VIDEO JACK SCM-27
POWER SCM-28

P.C. BOARD DIAGRAMS

CIRCUIT BOARD LOCATION SCM-29
DECODER SCM-30
VIDEO 1 ..... SCM-31
VIDEO 2 ..... SCM-32
VIDEO 3 ..... SCM-33
VIDEO 4 ..... SCM-34
VIDEO MOTHER SCM-35
AUDIO MOTHER SCM-35
AUDIO SCM-36
AUDIO I/O SCM-37
METER/METER SELECT/MONITOR/
MONITOR VR SCM-38
VOLUME/HEADPHONES/JACK VR/
EXT SW SCM-38
SERVO SCM-39
DRIVER SCM-40
SYSTEM CONTROL & TC SCM-41
FRONT SCM-42
MECHA I/F 1 ..... SCM-43
VIDEO JACK SCM-43
POWER SCM-44
CIRCUIT BOARD LOCATION SCM-44

OVERALL BLOCK DIAGRAM

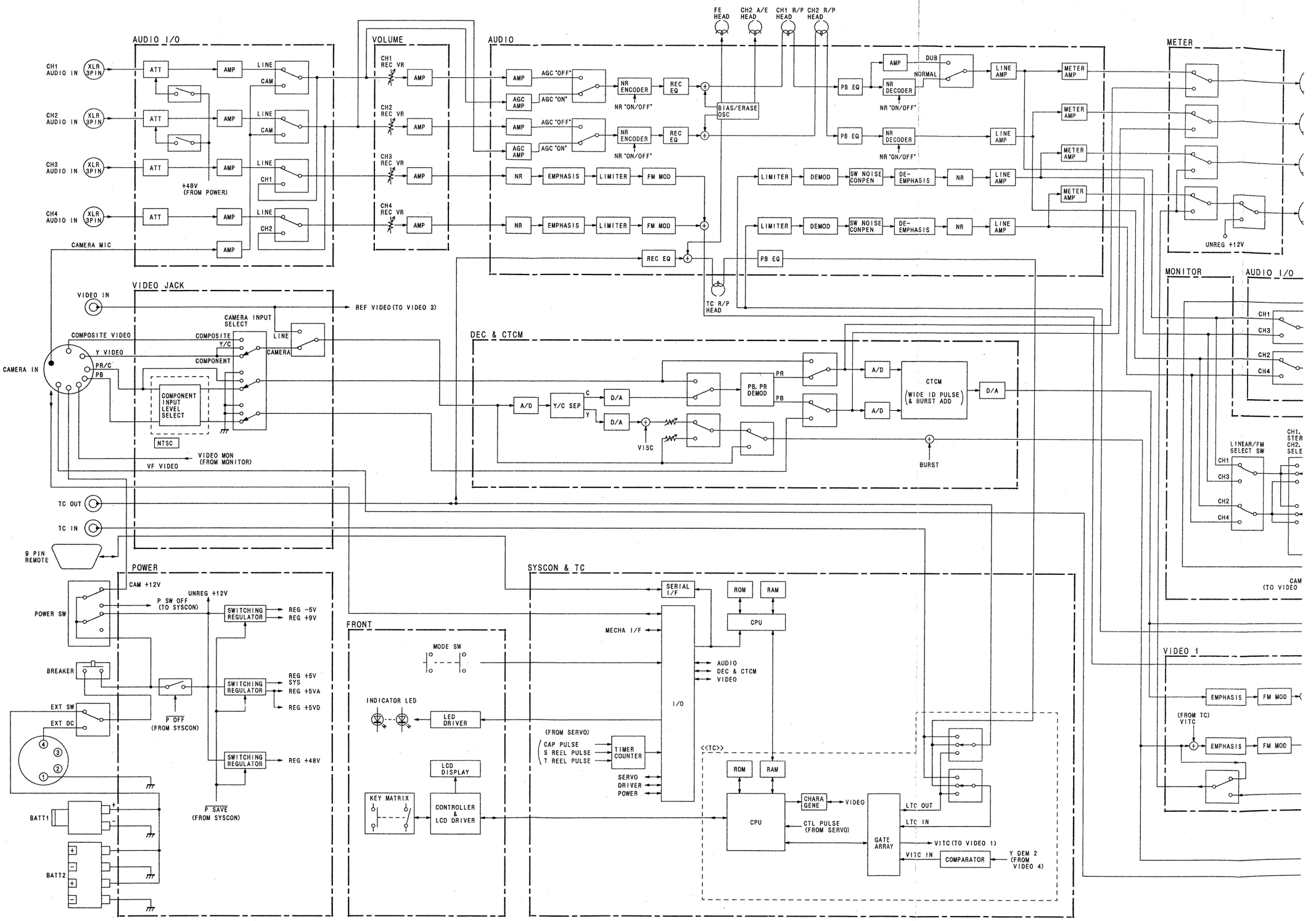

BLK—1

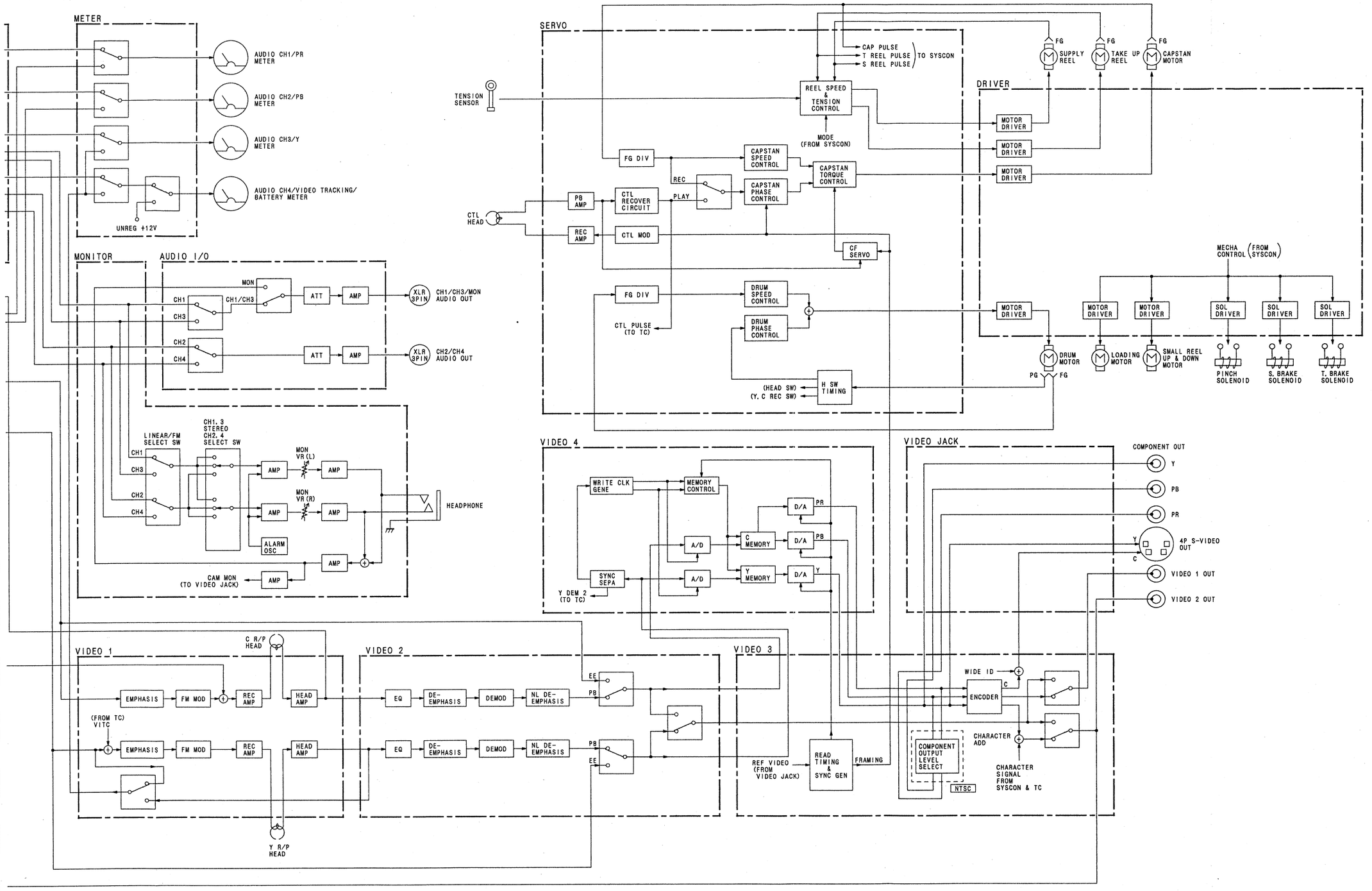
METER
AUDIO CH1/PR METER
AUDIO CH2/PB METER
AUDIO CH3/Y METER
AUDIO CH4/VIDEO TRACKING/ BATTERY METER
UNREG +12V
MONITOR
AUDIO I/O
MON
CH1
CH3
CH1/CH3
ATT
AMP
XLR 3PIN
CH1/CH3/MON AUDIO OUT
CH2
CH4
CH2/CH4 AUDIO OUT
LINEAR/FM SELECT SW
CH1, 3 STEREO CH2, 4 SELECT SW
MON VR (L)
MON VR (R)
HEADPHONE
ALARM OSC
CAM MON (TO VIDEO JACK)
SERVO
CAP PULSE
T REEL PULSE
S REEL PULSE
TO SYSCON
TENSION SENSOR
REEL SPEED & TENSION CONTROL
MODE (FROM SYSCON)
FG DIV
CAPSTAN SPEED CONTROL
CAPSTAN TORQUE CONTROL
CAPSTAN PHASE CONTROL
REC
PLAY
PB AMP
CTL RECOVER CIRCUIT
CTL HEAD
REC AMP
CTL MOD
CF SERVO
DRUM SPEED CONTROL
DRUM PHASE CONTROL
CTL PULSE (TO TC)
H SW TIMING
(HEAD SW)
(Y. C REC SW)
FG
SUPPLY REEL
TAKE UP REEL
CAPSTAN MOTOR
DRIVER
MOTOR DRIVER
MECHA CONTROL (FROM SYSCON)
SOL DRIVER
DRUM MOTOR
PG
LOADING MOTOR
SMALL REEL UP & DOWN MOTOR
PINCH SOLENOID
S. BRAKE SOLENOID
T. BRAKE SOLENOID
VIDEO 4
WRITE CLK GENE
MEMORY CONTROL
A/D
D/A
C MEMORY
Y MEMORY
SYNC SEPA
Y DEM 2 (TO TC)
VIDEO JACK
COMPONENT OUT
Y
PB
PR
4P S-VIDEO OUT
C
VIDEO 1 OUT
VIDEO 2 OUT
VIDEO 1
C R/P HEAD
Y R/P HEAD
EMPHASIS
FM MOD
REC AMP
HEAD AMP
(FROM TC) VITC
VIDEO 2
EQ
DE-EMPHASIS
DEMOD
NL DE-EMPHASIS
EE
PB
VIDEO 3
REF VIDEO (FROM VIDEO JACK)
READ TIMING & SYNC GEN
FRAMING
WIDE ID
ENCODER
C
CHARACTER ADD
CHARACTER SIGNAL FROM SYSCON & TC
COMPONENT OUTPUT LEVEL SELECT
NTSC

DECODER & CTCM BLOCK DIAGRAM (1/4)

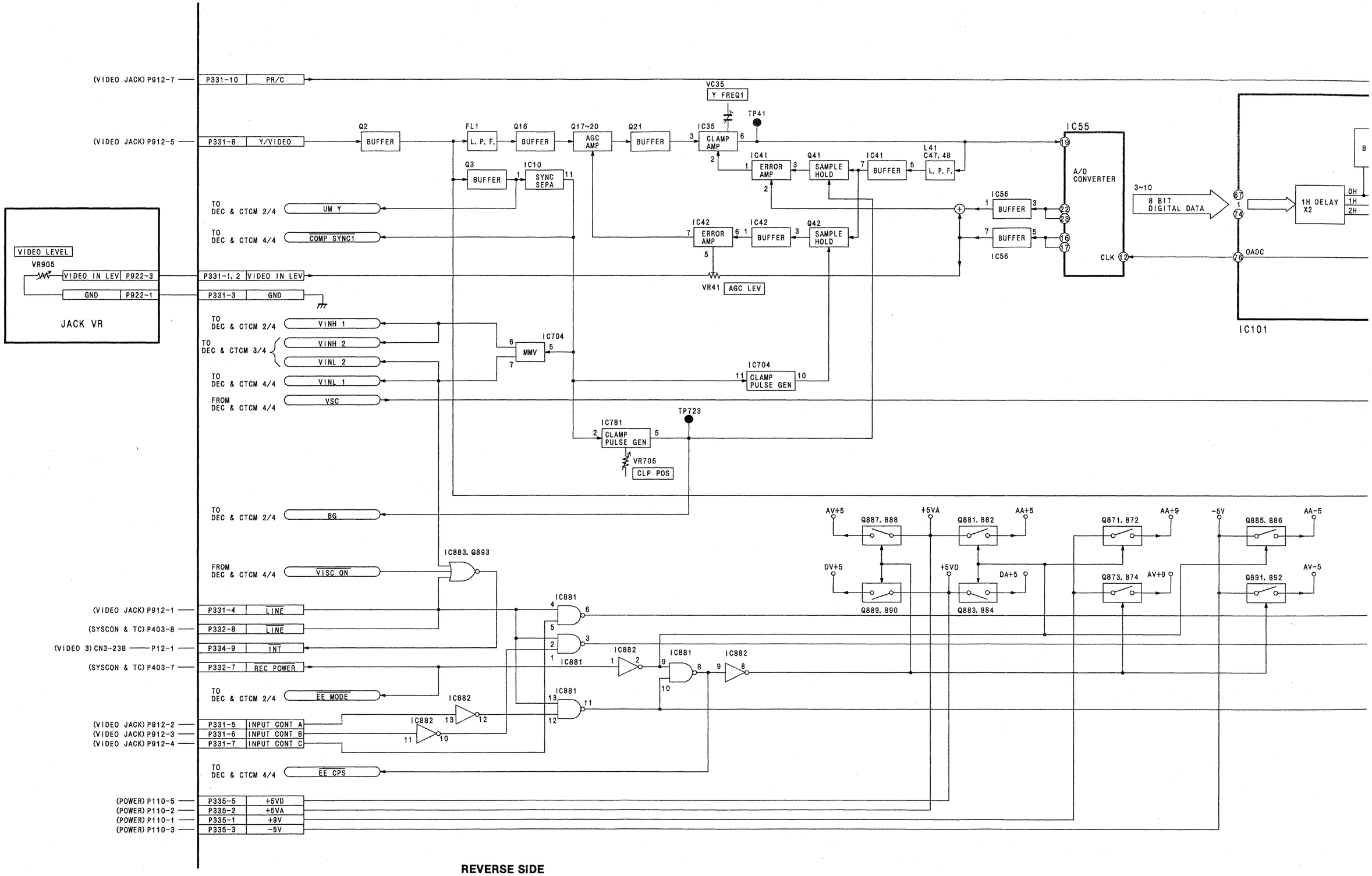

BLK—2

REVERSE SIDE

OVERALL

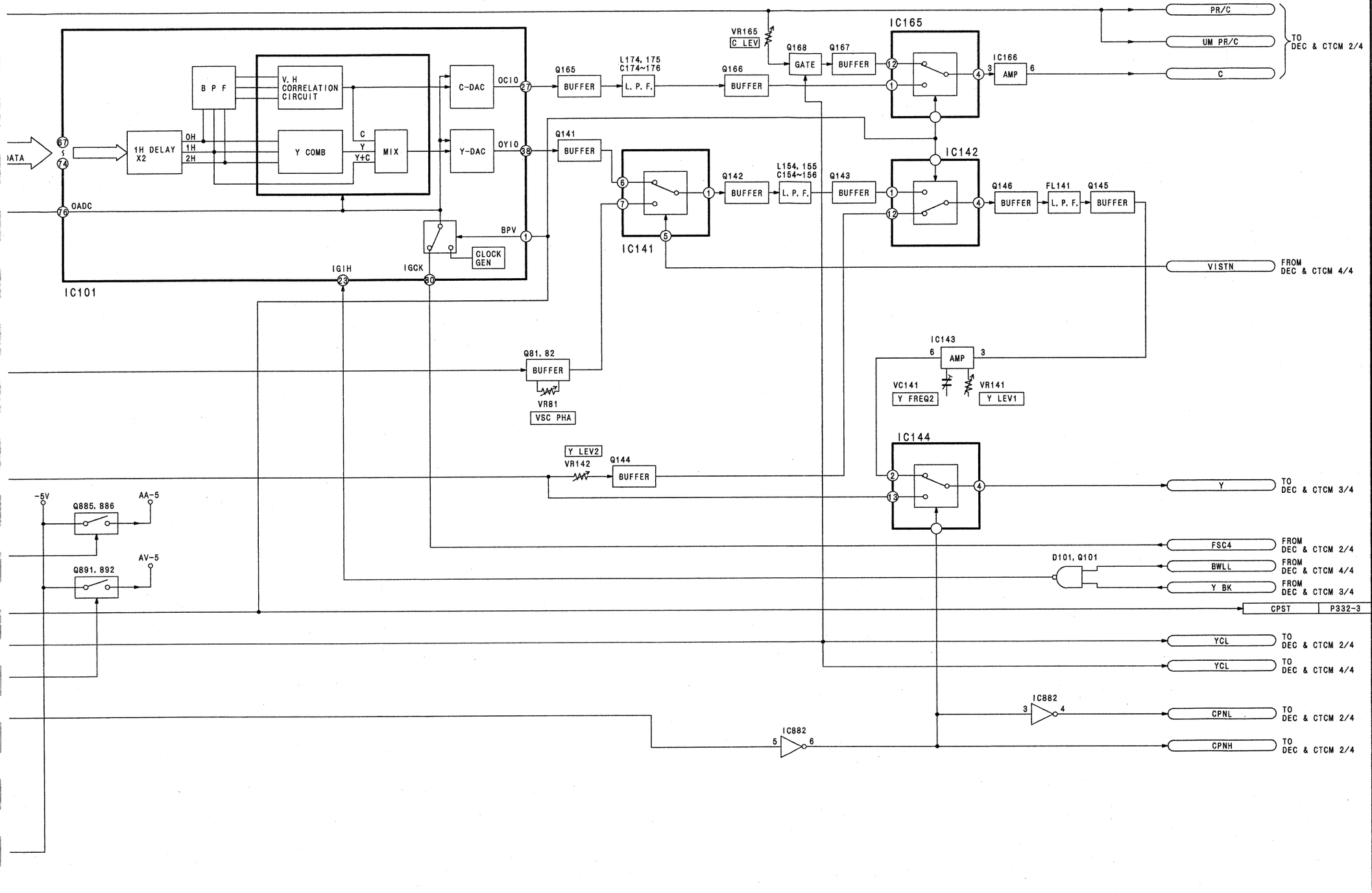
DATA
67
74
76
OADC
1H DELAY X2
OH
1H
2H
B P F
V, H CORRELATION CIRCUIT
Y COMB
C
Y
Y+C
MIX
C-DAC
Y-DAC
OCIO
OYIO
27
38
BPV
1
CLOCK GEN
IGIH
IGCK
23
80
IC101
Q165
BUFFER
L174, 175
C174~176
L. P. F.
Q166
BUFFER
VR165
C LEV
Q168
GATE
Q167
BUFFER
IC165
12
1
4
IC166
3
AMP
6
PR/C
UM PR/C
C
TO
DEC & CTCM 2/4
Q141
BUFFER
IC141
6
7
5
1
Q142
BUFFER
L154, 155
C154~156
L. P. F.
Q143
BUFFER
IC142
1
12
4
Q146
BUFFER
FL141
L. P. F.
Q145
BUFFER
VISTN
FROM
DEC & CTCM 4/4
Q81, 82
BUFFER
VR81
VSC PHA
IC143
6
AMP
3
VC141
Y FREQ2
VR141
Y LEV1
IC144
2
13
4
Y LEV2
VR142
Q144
BUFFER
Y
TO
DEC & CTCM 3/4
FSC4
FROM
DEC & CTCM 2/4
D101, Q101
BWLL
FROM
DEC & CTCM 4/4
Y BK
FROM
DEC & CTCM 3/4
CPST
P332-3
P403-3 (SYSCON & TC)
YCL
TO
DEC & CTCM 2/4
YCL
TO
DEC & CTCM 4/4
IC882
3
4
CPNL
TO
DEC & CTCM 2/4
IC882
5
6
CPNH
TO
DEC & CTCM 2/4
-5V
Q885, 886
AA-5
Q891, 892
AV-5

BLK—2

DECODER & CTCM BLOCK DIAGRAM (2/4)

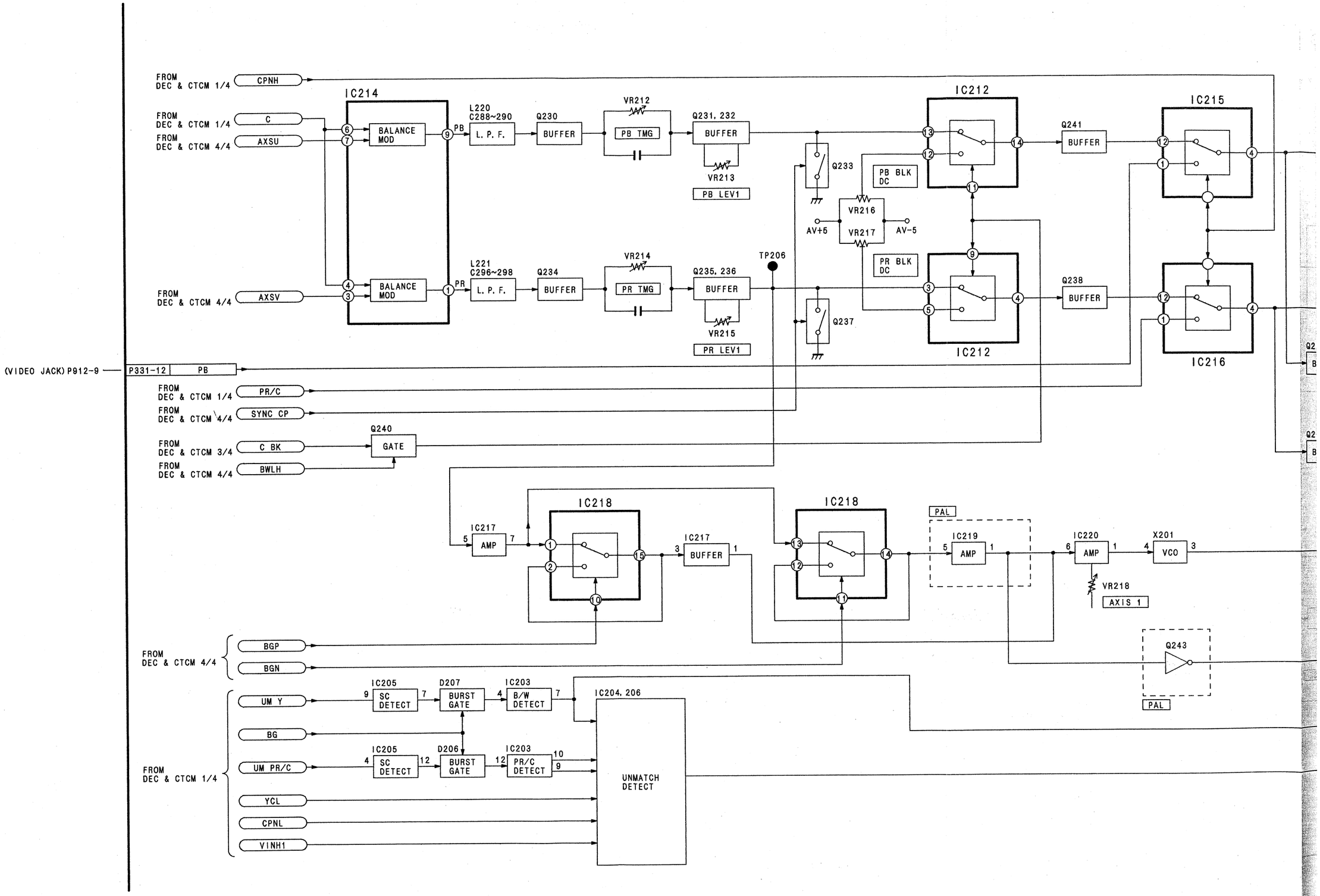

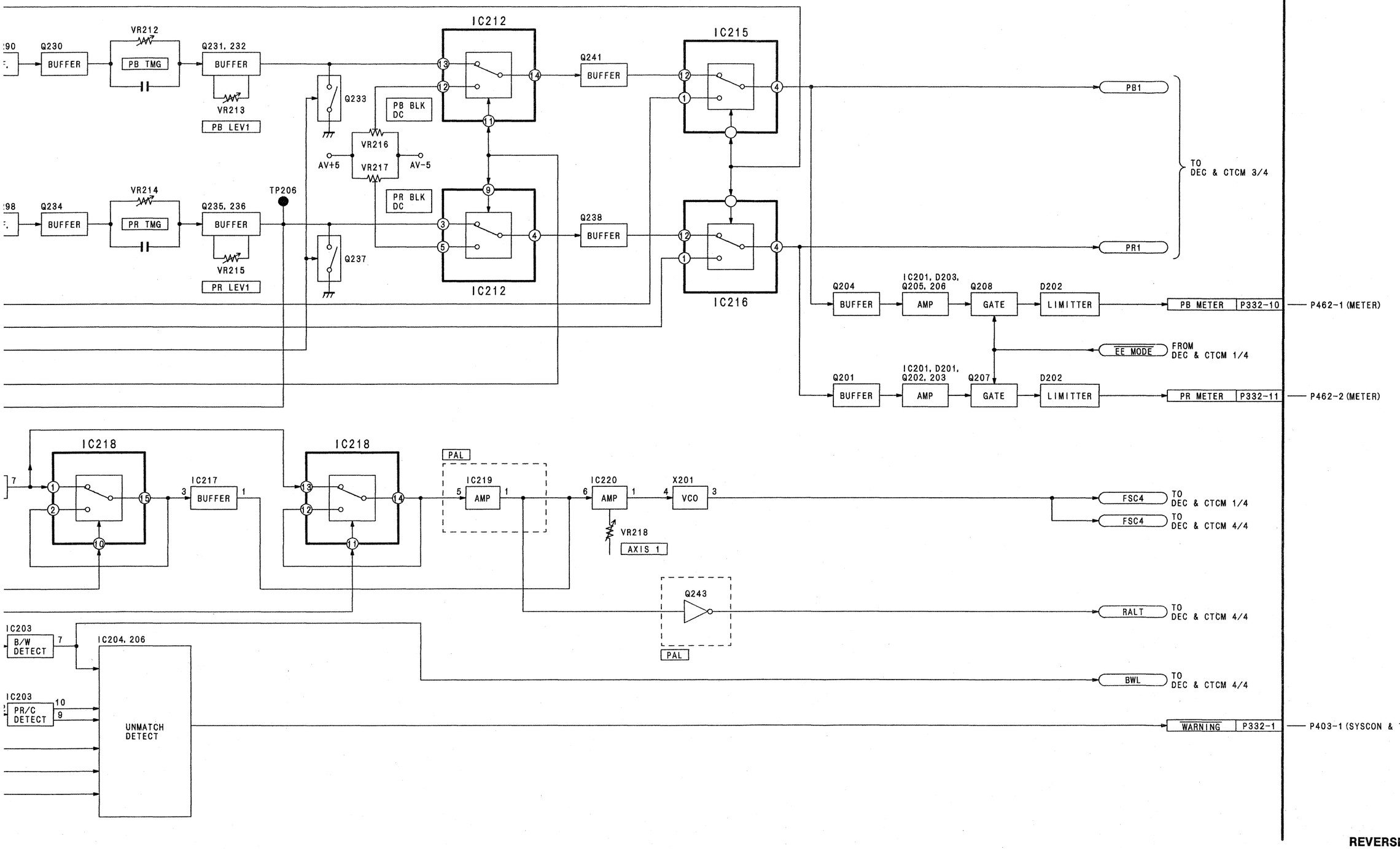

REVERSE SIDE
DECODER & CTCM 3/4

DECODER & CTCM BLOCK DIAGRAM (3/4)

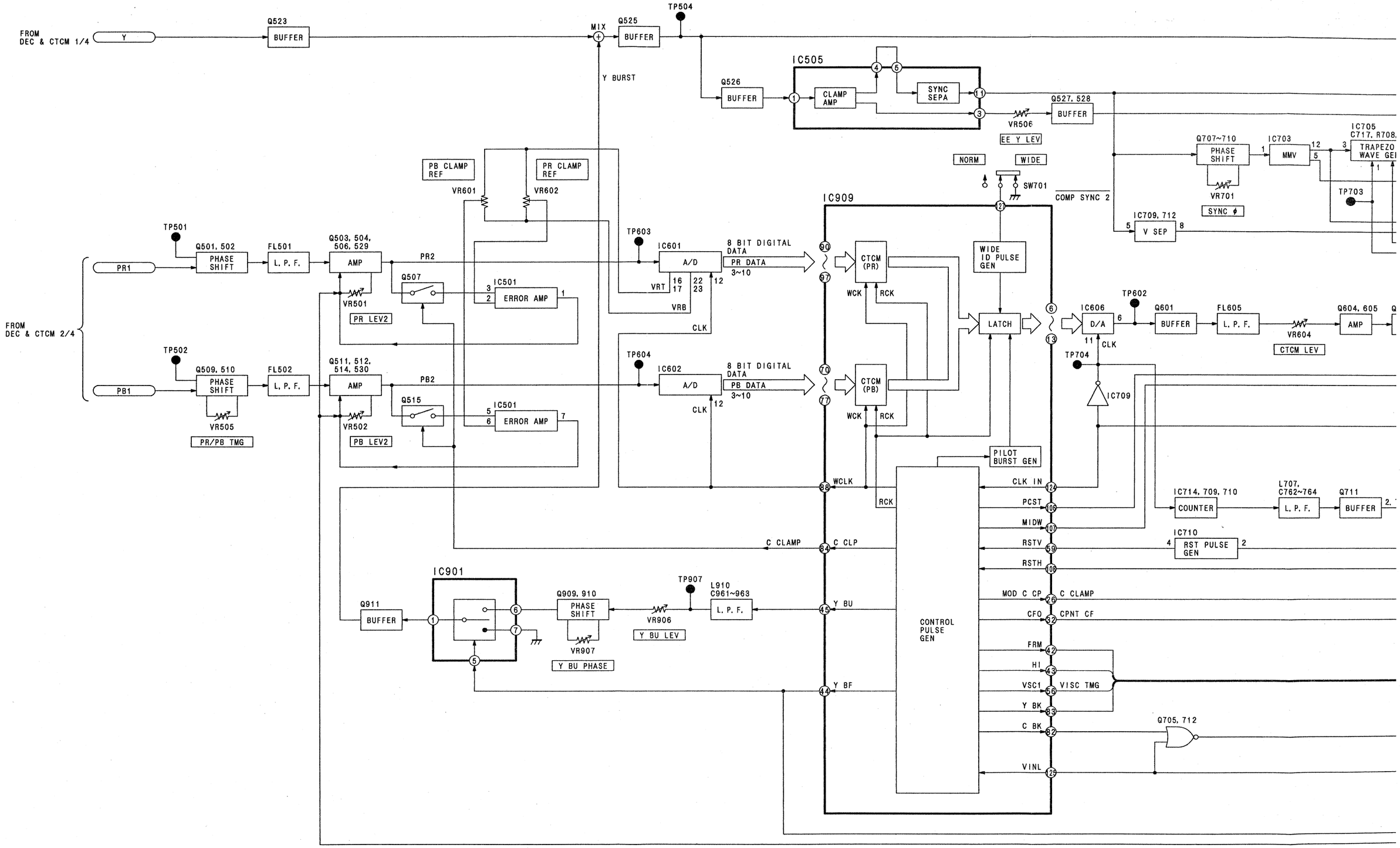

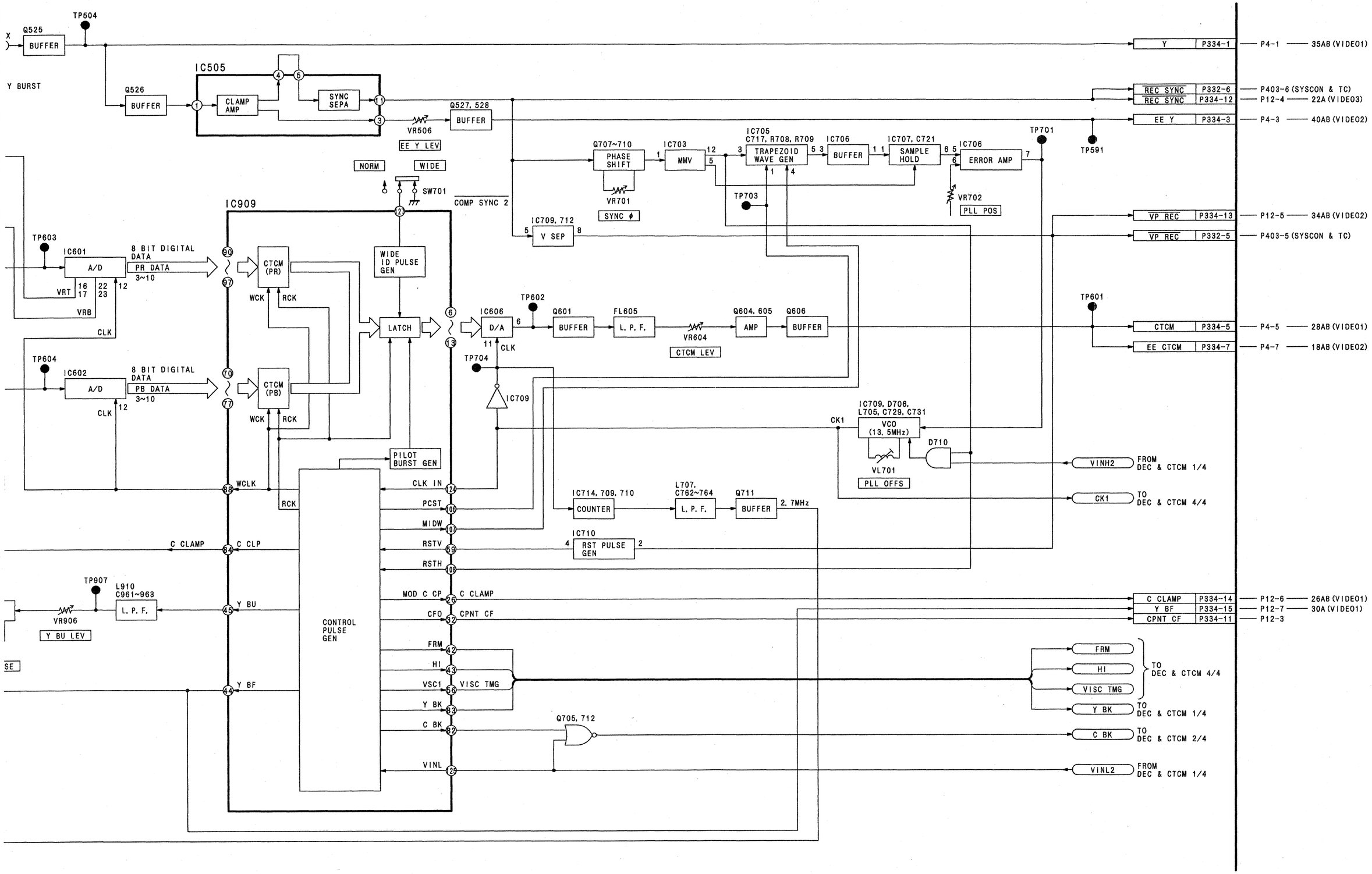
TP504
Q525
X
BUFFER
Y BURST
Q526
BUFFER
IC505
CLAMP AMP
SYNC SEPA
VR506
EE Y LEV
Q527, 528
BUFFER
Y
P334-1
P4-1
35AB (VIDEO1)
REC SYNC
P332-6
P403-6 (SYSCON & TC)
REC SYNC
P334-12
P12-4
22A (VIDEO3)
EE Y
P334-3
P4-3
40AB (VIDEO2)
TP591
TP701
IC706
ERROR AMP
VR702
PLL POS
IC707, C721
SAMPLE HOLD
IC706
BUFFER
IC705
C717, R708, R709
TRAPEZOID WAVE GEN
IC703
MMV
Q707~710
PHASE SHIFT
VR701
SYNC ϕ
TP703
NORM
WIDE
SW701
COMP SYNC 2
IC709, 712
V SEP
VP REC
P334-13
P12-5
34AB (VIDEO2)
VP REC
P332-5
P403-5 (SYSCON & TC)
IC909
TP603
IC601
A/D
8 BIT DIGITAL DATA
PR DATA
3~10
VRT
VRB
CLK
WCK
RCK
CTCM (PR)
WIDE ID PULSE GEN
LATCH
IC606
D/A
TP602
Q601
BUFFER
FL605
L. P. F.
VR604
CTCM LEV
Q604, 605
AMP
Q606
BUFFER
TP601
CTCM
P334-5
P4-5
28AB (VIDEO1)
EE CTCM
P334-7
P4-7
18AB (VIDEO2)
TP604
IC602
A/D
8 BIT DIGITAL DATA
PB DATA
3~10
CLK
WCK
RCK
CTCM (PB)
TP704
IC709
IC709, D706, L705, C729, C731
VCO (13. 5MHz)
CK1
D710
VL701
PLL OFFS
VINH2
FROM DEC & CTCM 1/4
CK1
TO DEC & CTCM 4/4
PILOT BURST GEN
WCLK
RCK
CLK IN
PCST
MIDW
RSTV
RSTH
IC714, 709, 710
COUNTER
L707, C762~764
L. P. F.
Q711
BUFFER
2. 7MHz
IC710
RST PULSE GEN
C CLAMP
C CLP
TP907
L910
C961~963
L. P. F.
VR906
Y BU LEV
Y BU
Y BF
CONTROL PULSE GEN
MOD C CP
C CLAMP
CFO
CPNT CF
FRM
HI
VSC1
VISC TMG
Y BK
C BK
VINL
Q705, 712
C CLAMP
P334-14
P12-6
26AB (VIDEO1)
Y BF
P334-15
P12-7
30A (VIDEO1)
CPNT CF
P334-11
P12-3
FRM
HI
VISC TMG
TO DEC & CTCM 4/4
Y BK
TO DEC & CTCM 1/4
C BK
TO DEC & CTCM 2/4
VINL2
FROM DEC & CTCM 1/4

DECODER & CTCM BLOCK DIAGRAM (4/4)

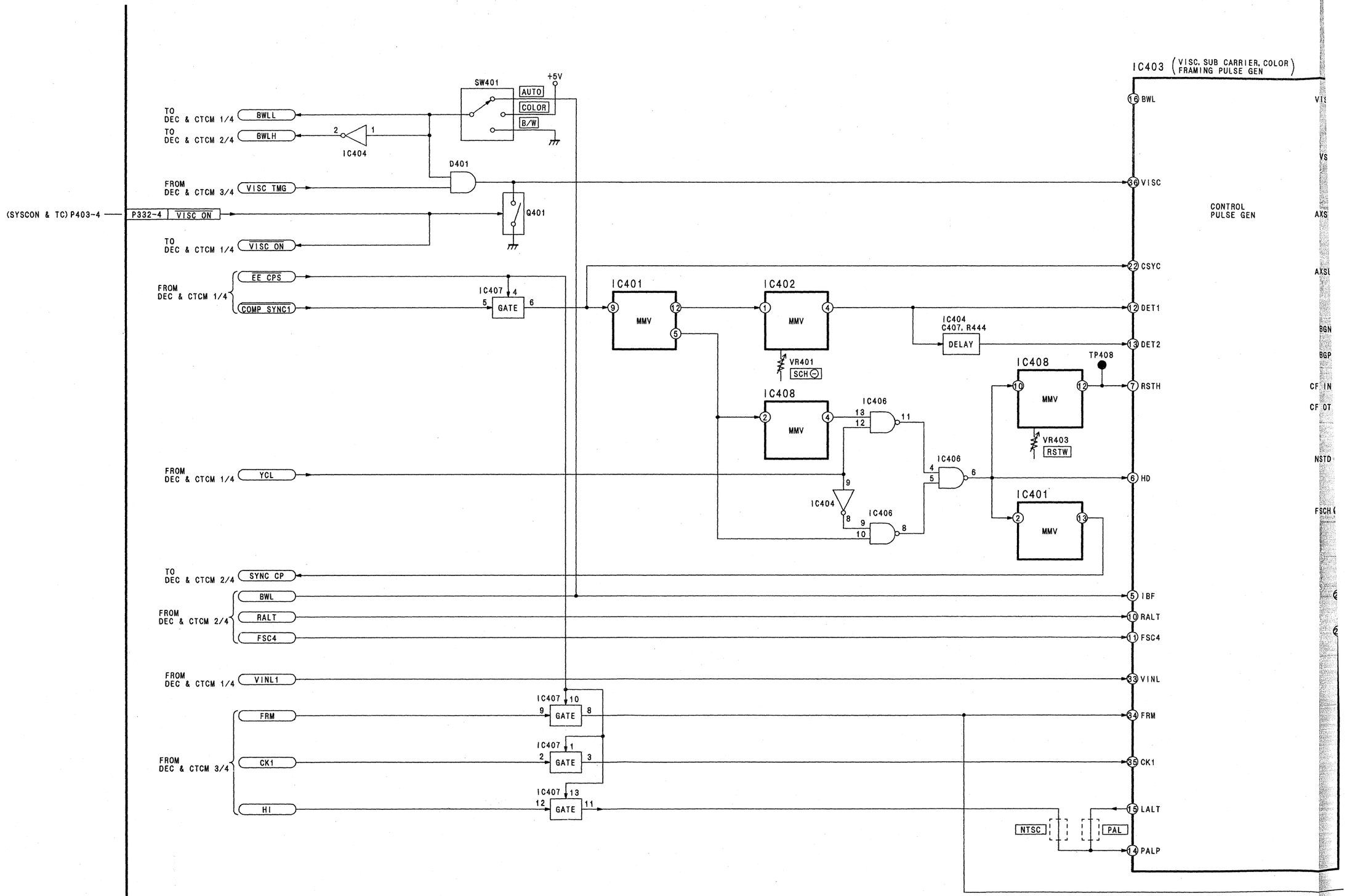

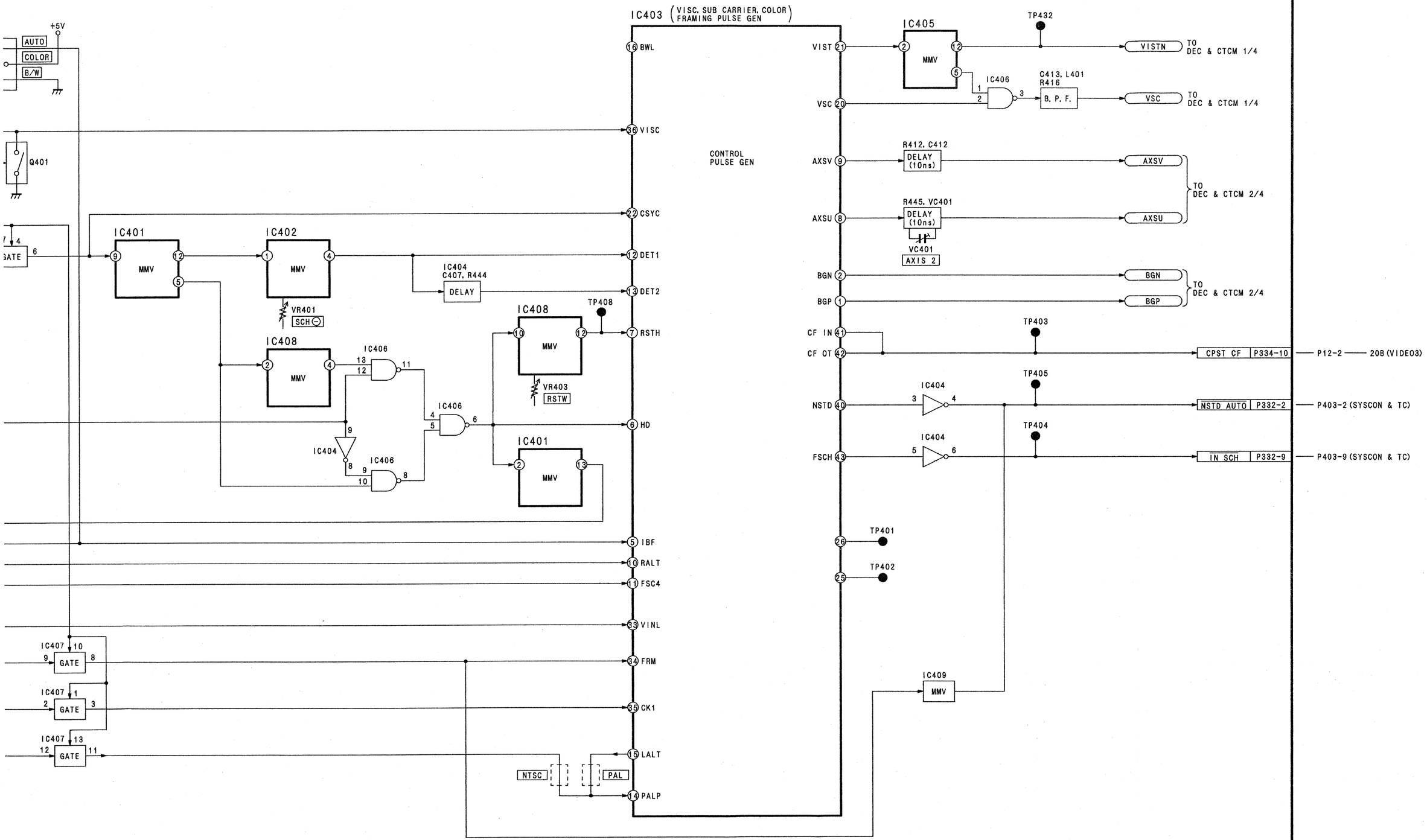
+5V
AUTO
COLOR
B/W
Q401
IC401
MMV
IC402
MMV
IC404
C407, R444
DELAY
VR401
SCH
IC408
MMV
IC406
IC404
IC406
IC408
MMV
TP408
VR403
RSTW
IC401
MMV
IC403 (VISC, SUB CARRIER, COLOR FRAMING PULSE GEN
CONTROL PULSE GEN
16 BWL
36 VISC
22 CSYC
12 DET1
13 DET2
7 RSTH
6 HD
5 IBF
10 RALT
11 FSC4
33 VINL
34 FRM
35 CK1
15 LALT
14 PALP
NTSC
PAL
IC407 GATE
IC407 GATE
IC407 GATE
IC405
MMV
TP432
VIST 21
VSC 20
IC406
C413, L401
R416
B. P. F.
VISTN
VSC
TO DEC & CTCM 1/4
AXSV 9
AXSU 8
R412, C412
DELAY (10ns)
R445, VC401
DELAY (10ns)
VC401
AXIS 2
AXSV
AXSU
TO DEC & CTCM 2/4
BGN 2
BGP 1
BGN
BGP
TO DEC & CTCM 2/4
CF IN 41
CF OT 42
TP403
CPST CF P334-10
P12-2 20B (VIDEO3)
NSTD 40
IC404
TP405
NSTD AUTO P332-2
P403-2 (SYSCON & TC)
FSCH 43
IC404
TP404
IN SCH P332-9
P403-9 (SYSCON & TC)
TP401
26
TP402
25
IC409
MMV

VIDEO 1 BLOCK DIAGRAM (1/2)

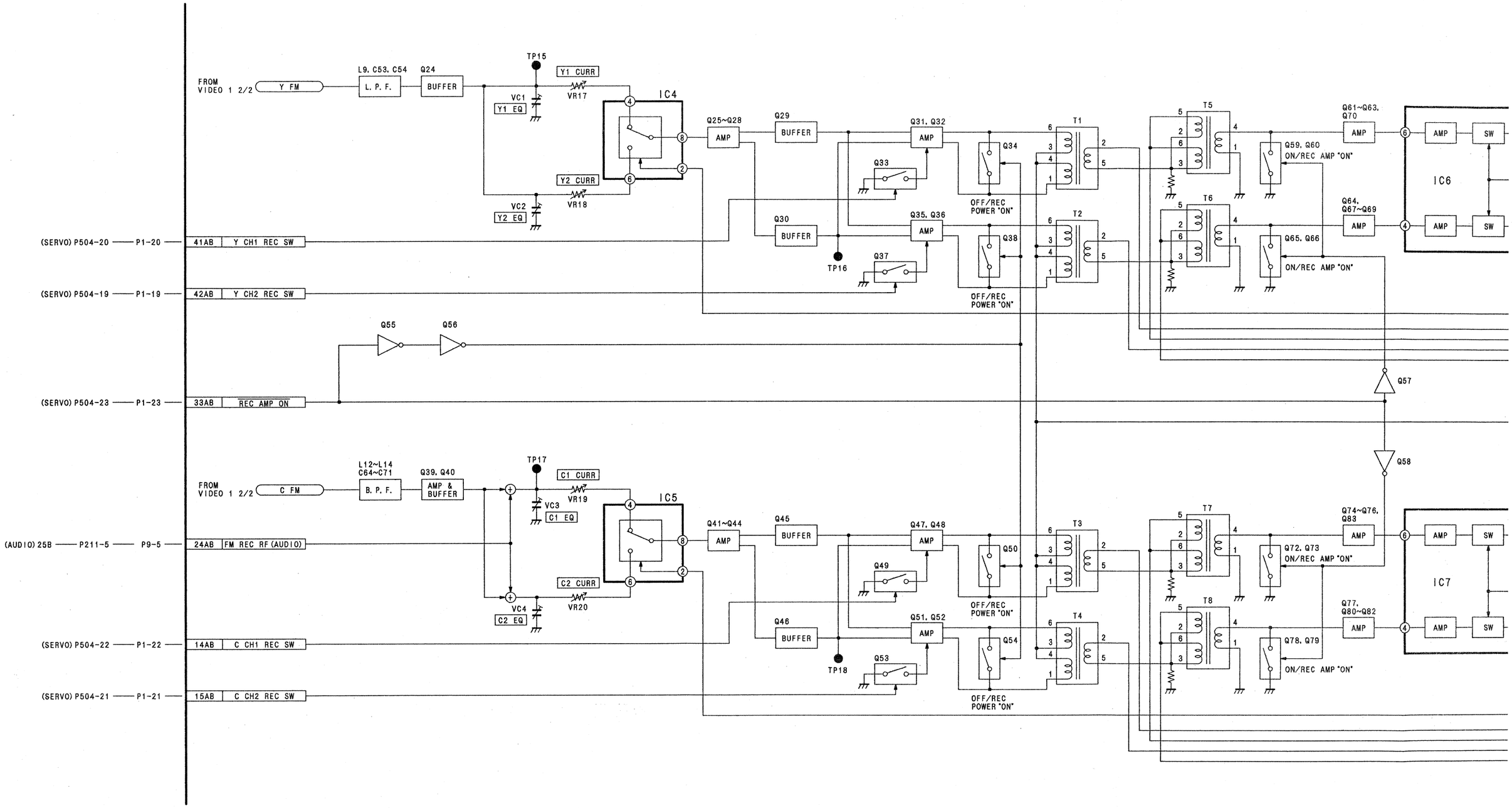

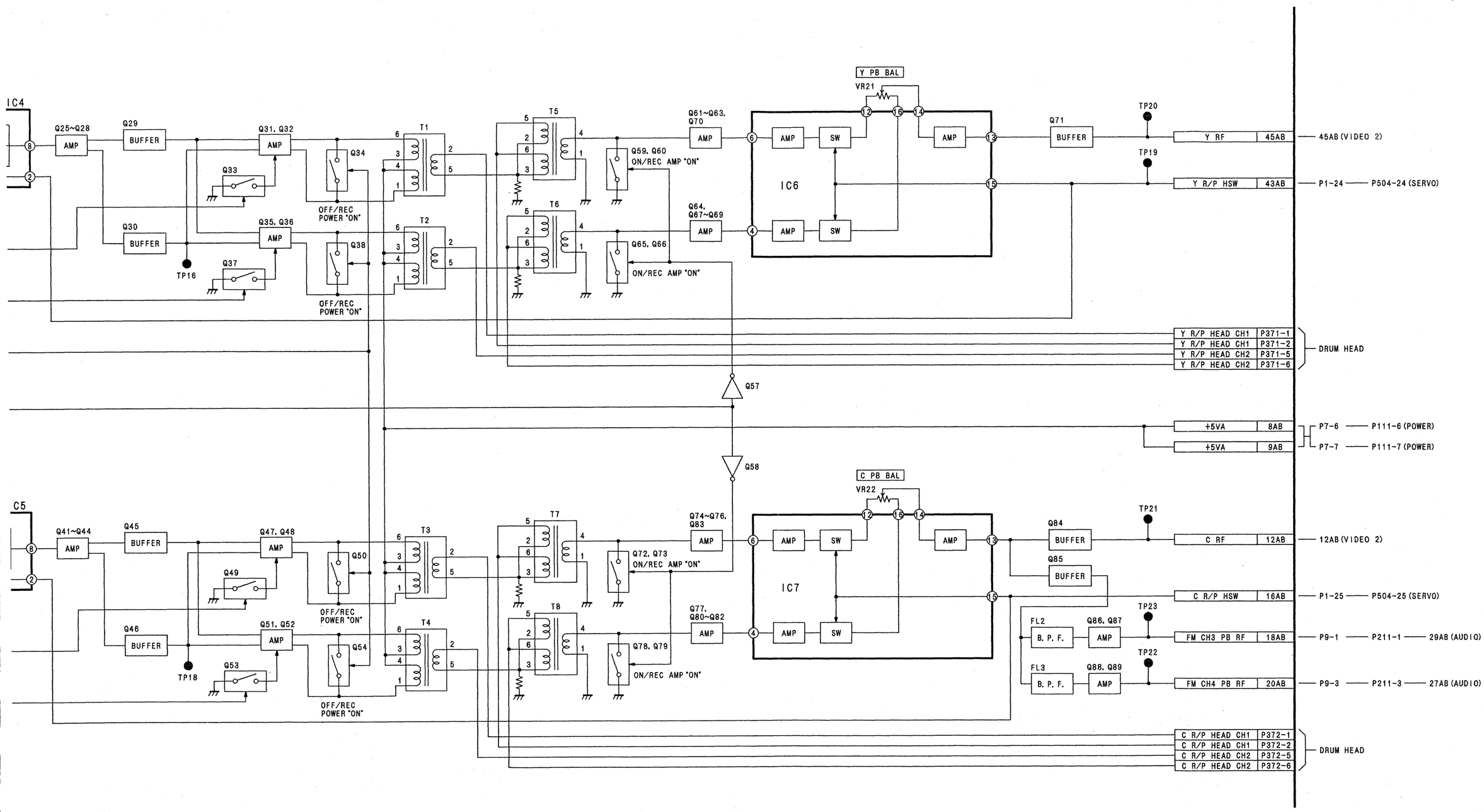
IC4
Q25~Q28
AMP
Q29
BUFFER
Q31, Q32
AMP
Q33
Q34
OFF/REC
POWER "ON"
T1
Q30
BUFFER
Q35, Q36
AMP
Q37
Q38
OFF/REC
POWER "ON"
T2
TP16
T5
T6
Q61~Q63,
Q70
AMP
Q59, Q60
ON/REC AMP "ON"
Q64,
Q67~Q69
AMP
Q65, Q66
ON/REC AMP "ON"
Y PB BAL
VR21
IC6
AMP
SW
AMP
Q71
BUFFER
TP20
TP19
Y RF
45AB
45AB (VIDEO 2)
Y R/P HSW
43AB
P1-24
P504-24 (SERVO)
Y R/P HEAD CH1
P371-1
Y R/P HEAD CH1
P371-2
Y R/P HEAD CH2
P371-5
Y R/P HEAD CH2
P371-6
DRUM HEAD
Q57
Q58
+5VA
8AB
+5VA
9AB
P7-6
P111-6 (POWER)
P7-7
P111-7 (POWER)
C5
Q41~Q44
AMP
Q45
BUFFER
Q47, Q48
AMP
Q49
Q50
OFF/REC
POWER "ON"
T3
Q46
BUFFER
Q51, Q52
AMP
Q53
Q54
OFF/REC
POWER "ON"
T4
TP18
T7
T8
Q74~Q76,
Q83
AMP
Q72, Q73
ON/REC AMP "ON"
Q77,
Q80~Q82
AMP
Q78, Q79
ON/REC AMP "ON"
C PB BAL
VR22
IC7
AMP
SW
AMP
Q84
BUFFER
Q85
BUFFER
TP21
TP23
TP22
FL2
B. P. F.
Q86, Q87
AMP
FL3
B. P. F.
Q88, Q89
AMP
C RF
12AB
12AB (VIDEO 2)
C R/P HSW
16AB
P1-25
P504-25 (SERVO)
FM CH3 PB RF
18AB
P9-1
P211-1
29AB (AUDIO)
FM CH4 PB RF
20AB
P9-3
P211-3
27AB (AUDIO)
C R/P HEAD CH1
P372-1
C R/P HEAD CH1
P372-2
C R/P HEAD CH2
P372-5
C R/P HEAD CH2
P372-6
DRUM HEAD

VIDEO 1 BLOCK DIAGRAM (2/2)

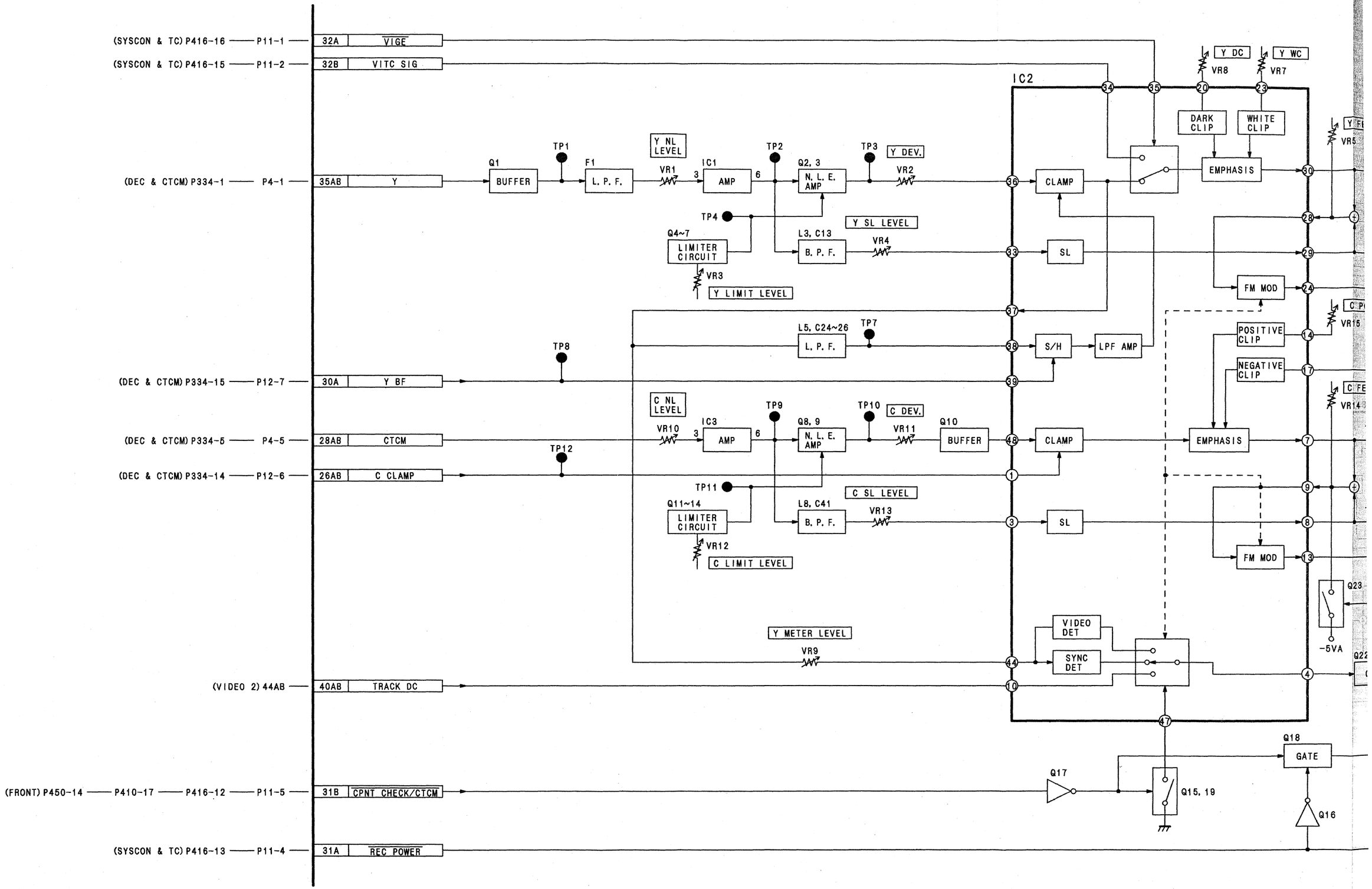

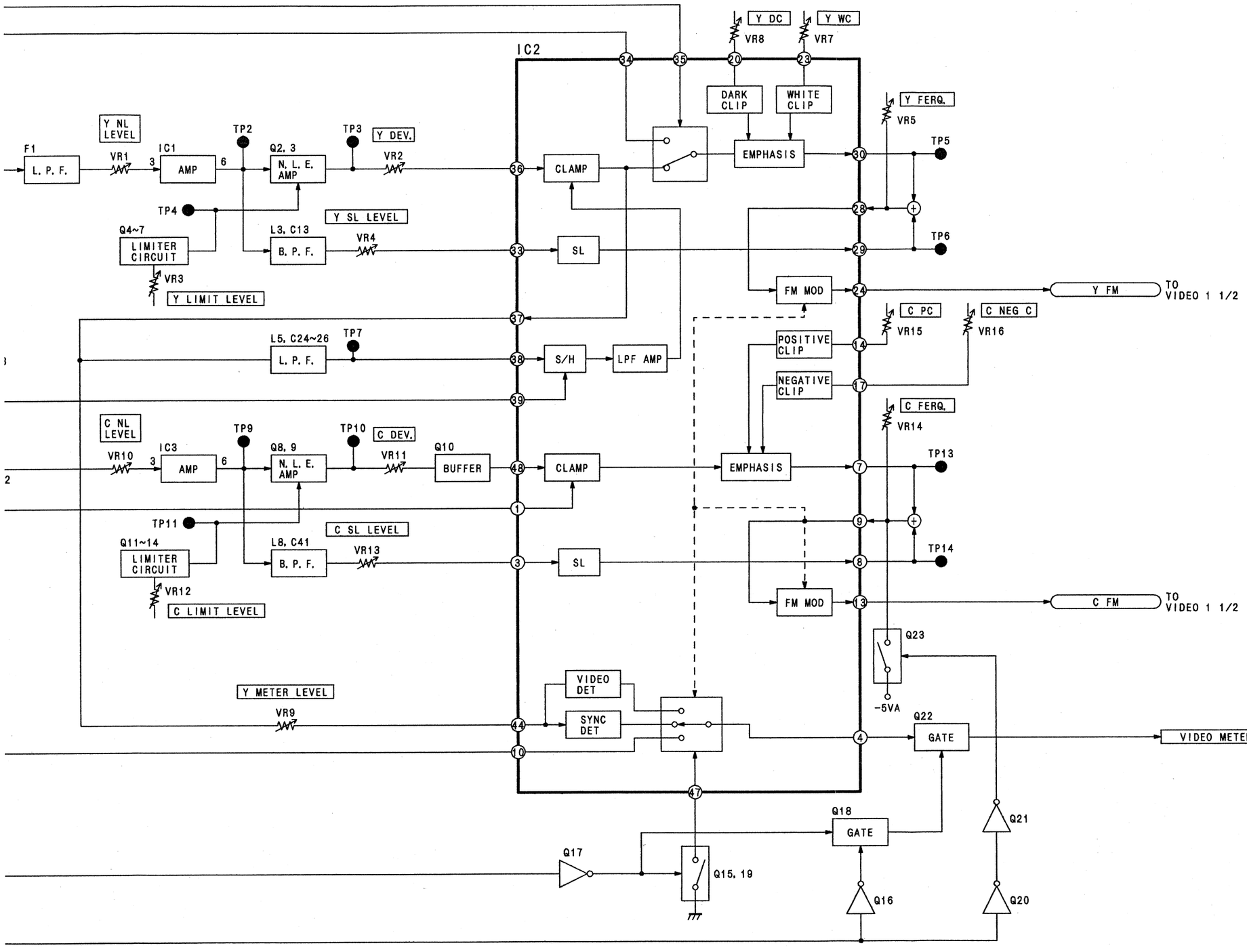

BLK—7

REVERSE SIDE
VIDEO 2 1/2

VIDEO 2 BLOCK DIAGRAM (1/2)

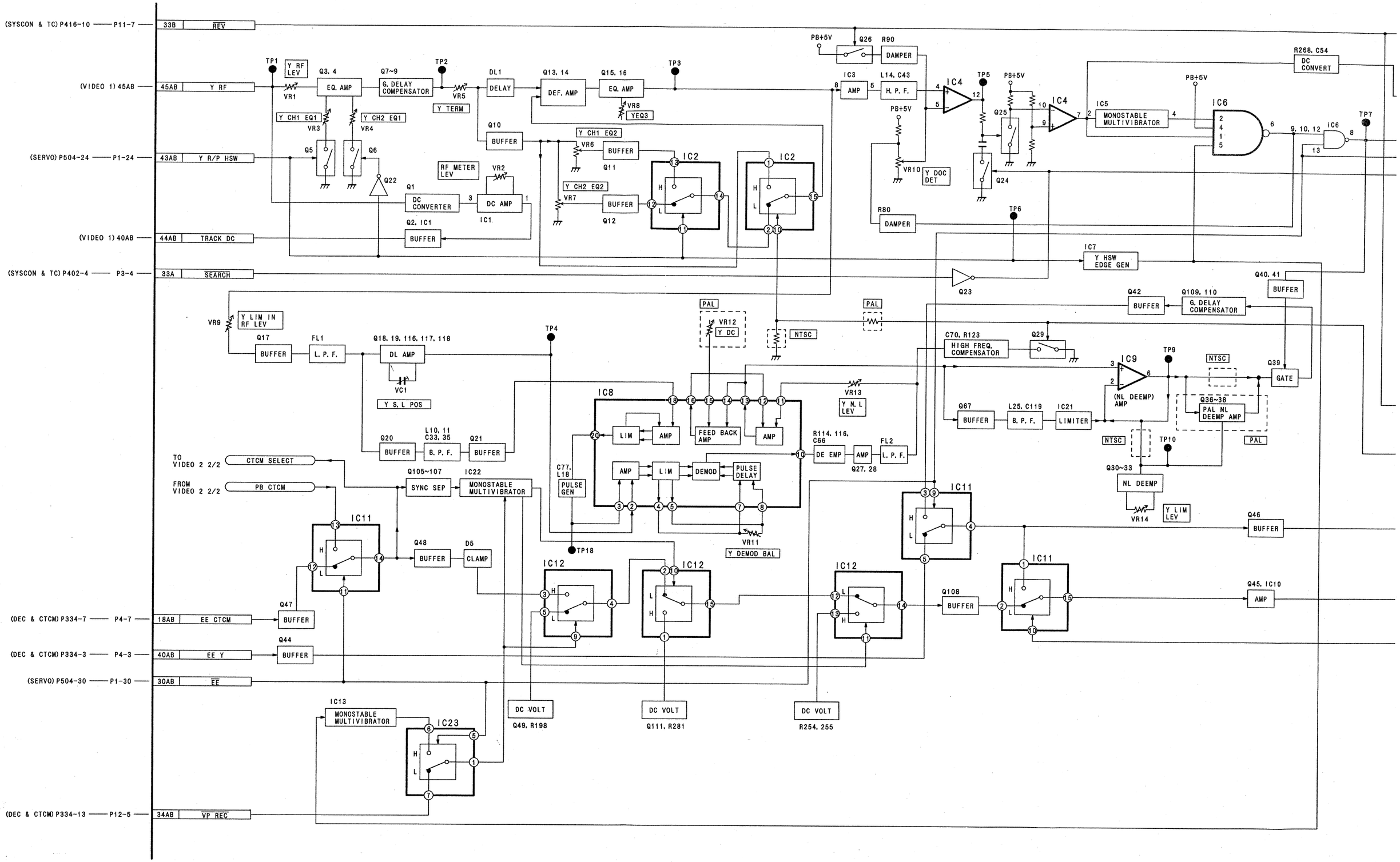

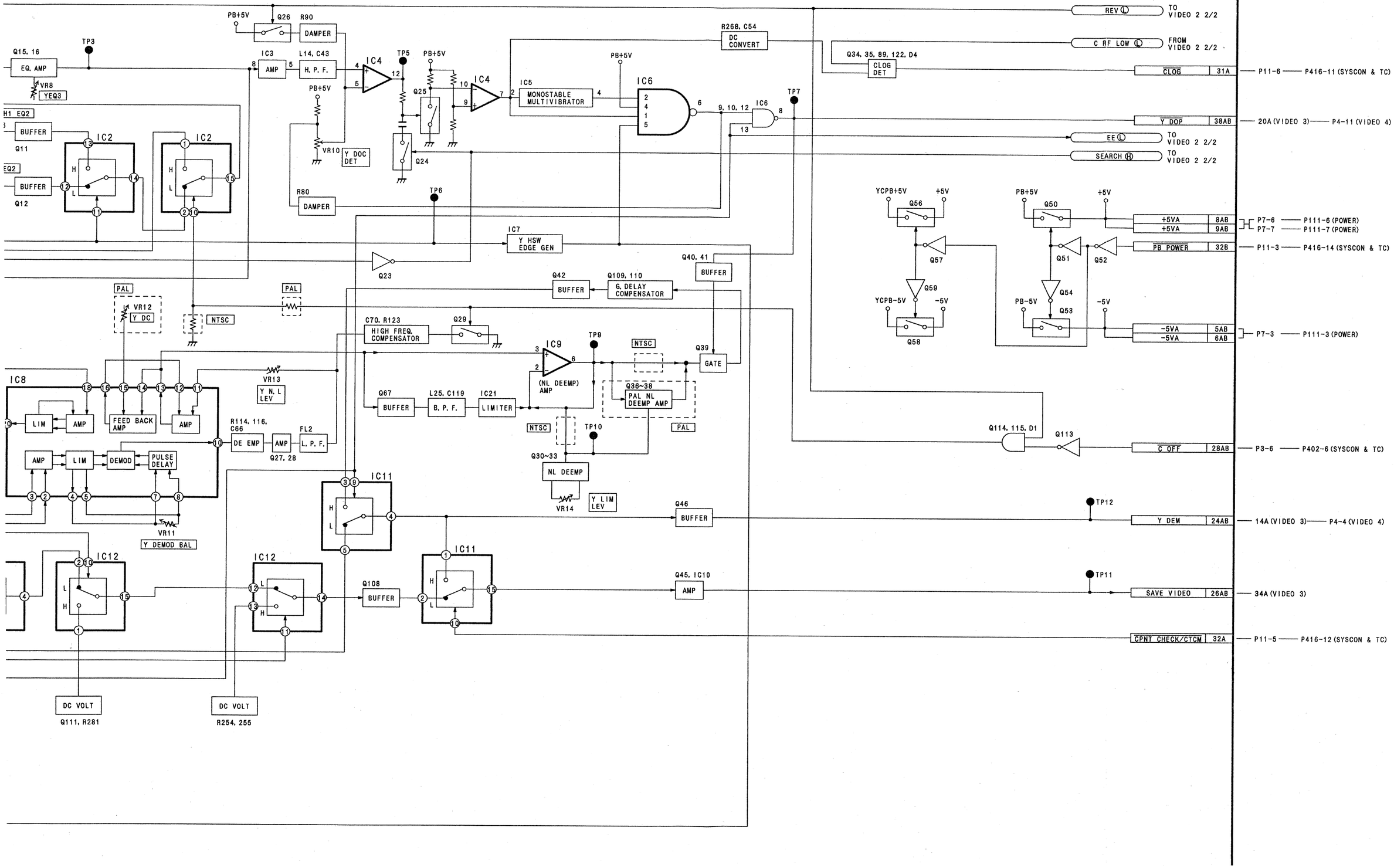
PB+5V
Q26
R90
DAMPER
TP3
Q15, 16
EQ. AMP
VR8
YEQ3
IC3
L14, C43
AMP
H. P. F.
IC4
TP5
PB+5V
Q25
IC4
IC5
MONOSTABLE MULTIVIBRATOR
R268, C54
DC CONVERT
IC6
PB+5V
Q34, 35, 89, 122, D4
CLOG DET
TP7
IC6
9, 10, 12
13
REV Ⓛ
TO VIDEO 2 2/2
C RF LOW Ⓛ
FROM VIDEO 2 2/2
CLOG
31A
P11-6
P416-11 (SYSCON & TC)
Y DOP
38AB
20A (VIDEO 3)
P4-11 (VIDEO 4)
EE Ⓛ
TO VIDEO 2 2/2
SEARCH Ⓗ
TO VIDEO 2 2/2
H1 EQ2
BUFFER
Q11
IC2
EQ2
BUFFER
Q12
IC2
PB+5V
VR10
Y DOC DET
Q24
R80
DAMPER
TP6
IC7
Y HSW EDGE GEN
Q23
Q40, 41
BUFFER
Q42
BUFFER
Q109, 110
G. DELAY COMPENSATOR
YCPB+5V
+5V
Q56
Q57
Q59
YCPB-5V
-5V
Q58
PB+5V
+5V
Q50
Q51
Q52
Q54
Q53
PB-5V
-5V
+5VA
8AB
+5VA
9AB
P7-6
P111-6 (POWER)
P7-7
P111-7 (POWER)
PB POWER
32B
P11-3
P416-14 (SYSCON & TC)
-5VA
5AB
-5VA
6AB
P7-3
P111-3 (POWER)
PAL
VR12
Y DC
NTSC
PAL
C70, R123
HIGH FREQ. COMPENSATOR
Q29
IC9
TP9
NTSC
Q39
GATE
(NL DEEMP) AMP
Q36~38
PAL NL DEEMP AMP
PAL
IC8
VR13
Y N. L LEV
LIM
AMP
FEED BACK AMP
AMP
Q67
BUFFER
L25, C119
B. P. F.
IC21
LIMITER
NTSC
TP10
R114, 116, C66
DE EMP
AMP
FL2
L. P. F.
Q27, 28
Q30~33
NL DEEMP
VR14
Y LIM LEV
Q114, 115, D1
Q113
C OFF
28AB
P3-6
P402-6 (SYSCON & TC)
AMP
LIM
DEMOD
PULSE DELAY
VR11
Y DEMOD BAL
IC11
Q46
BUFFER
TP12
Y DEM
24AB
14A (VIDEO 3)
P4-4 (VIDEO 4)
IC12
IC12
Q108
BUFFER
IC11
Q45, IC10
AMP
TP11
SAVE VIDEO
26AB
34A (VIDEO 3)
CPNT CHECK/CTCM
32A
P11-5
P416-12 (SYSCON & TC)
DC VOLT
Q111, R281
DC VOLT
R254, 255

VIDEO 2 BLOCK DIAGRAM (2/2)

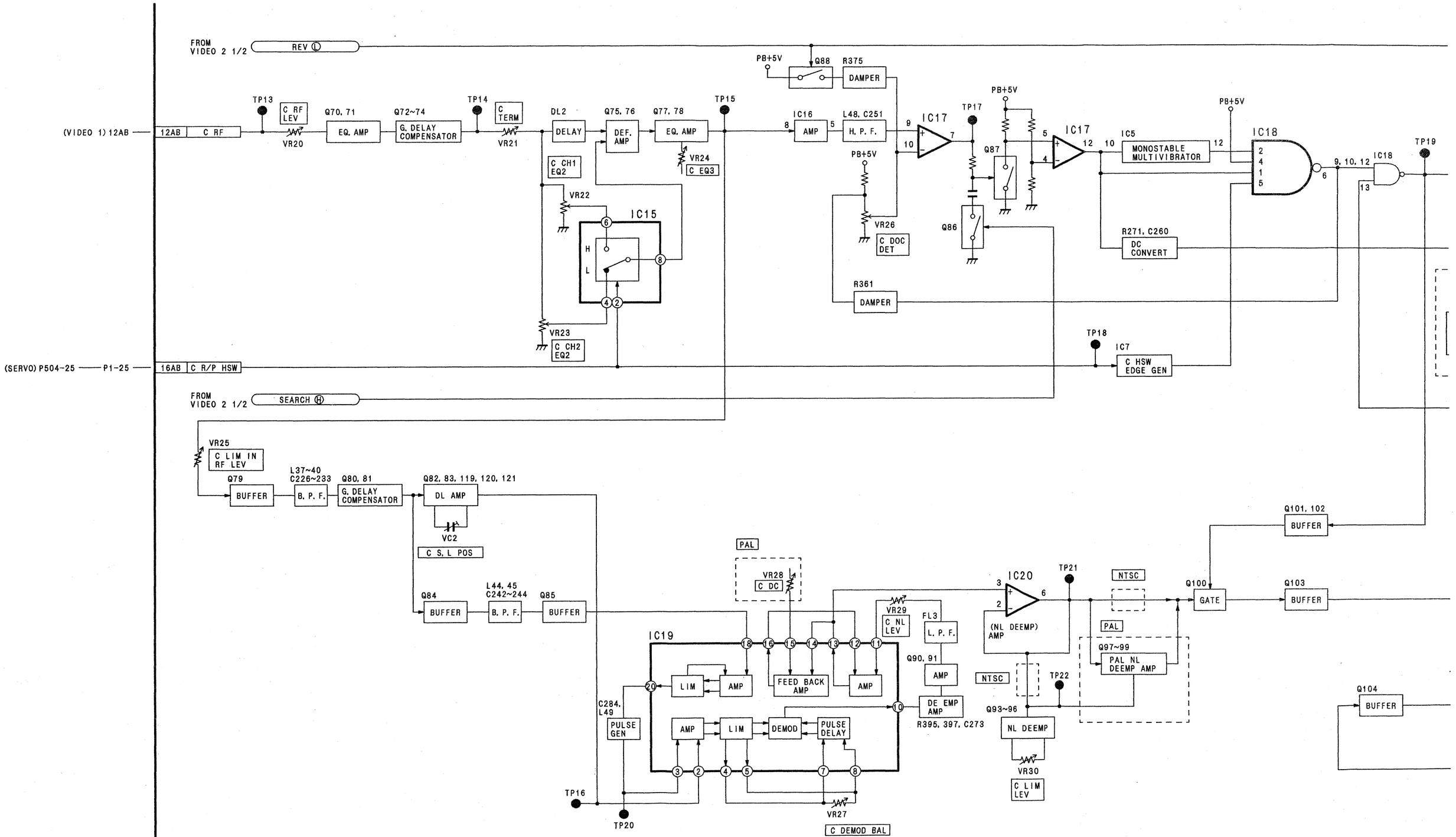

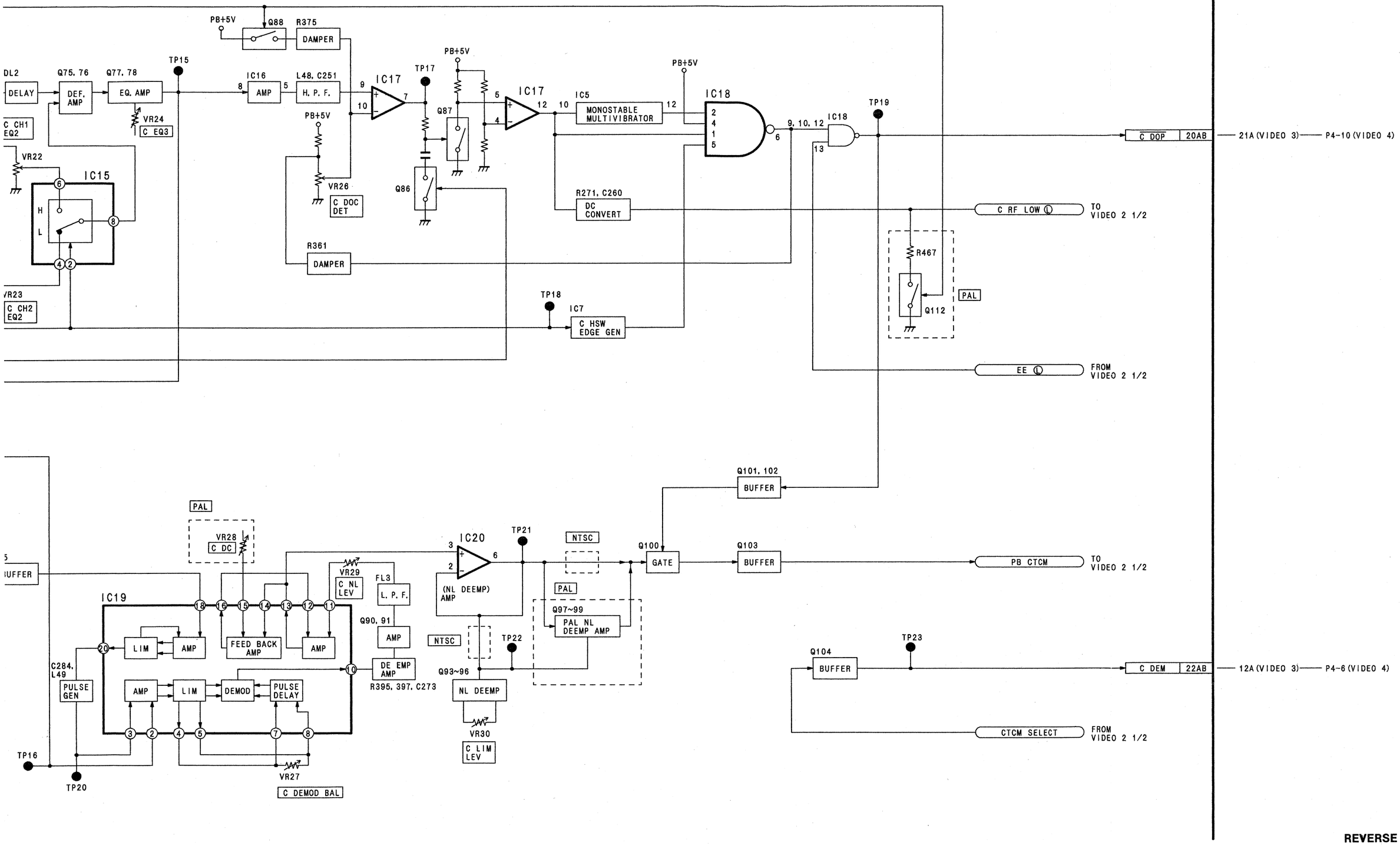

REVERSE SIDE
VIDEO 3 1/2

VIDEO 3 BLOCK DIAGRAM (1/2)

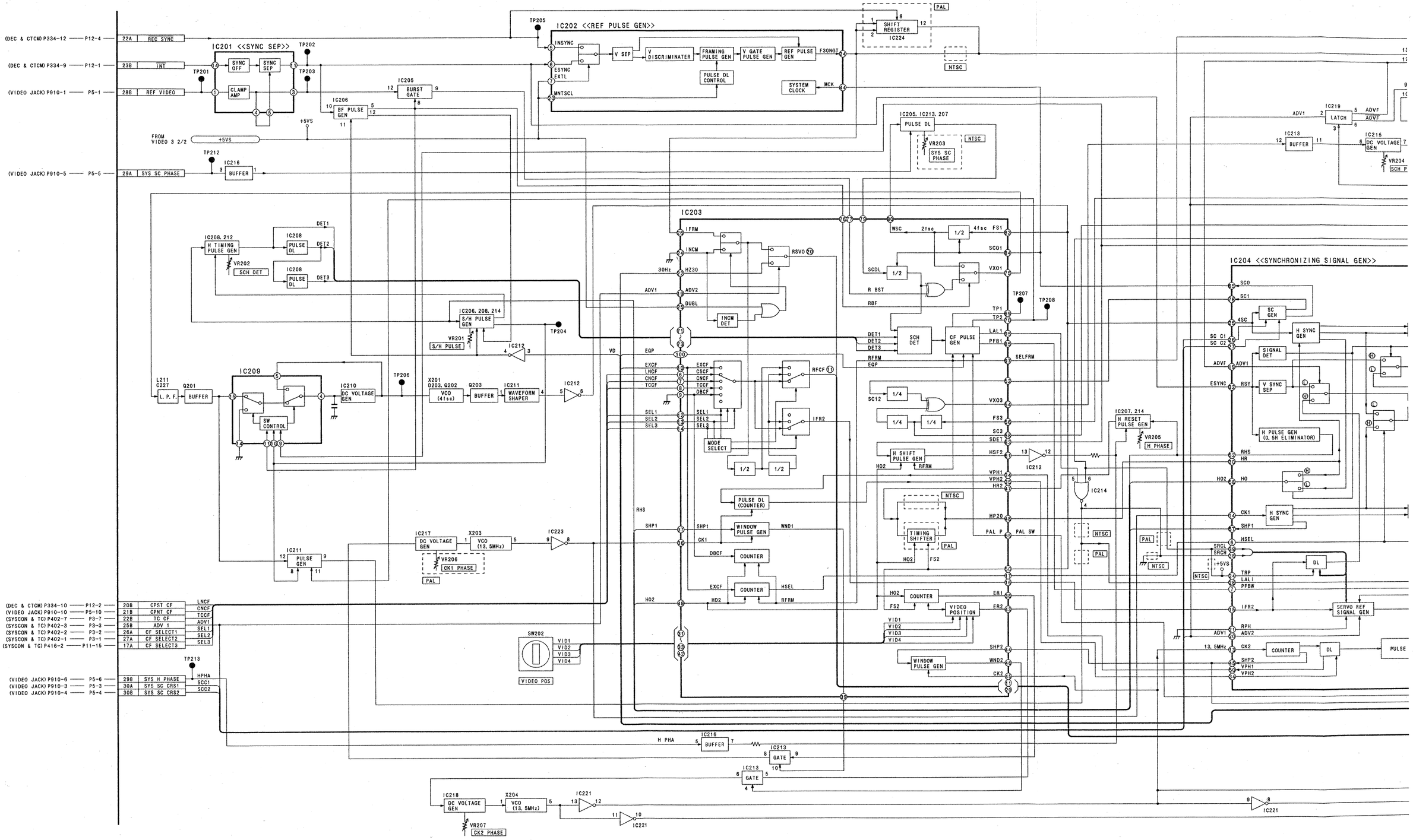

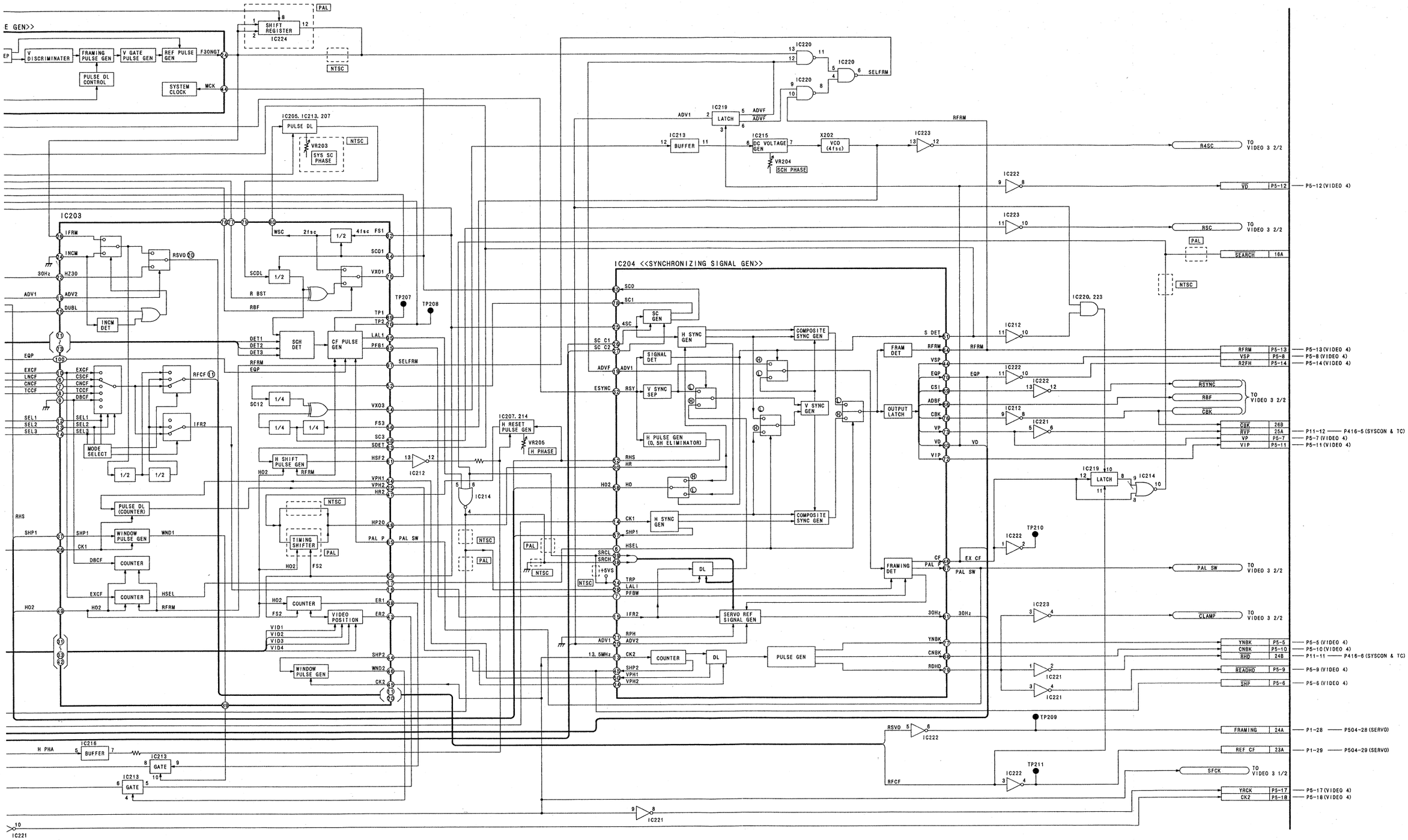
E GEN>>
V DISCRIMINATER
FRAMING PULSE GEN
V GATE PULSE GEN
REF PULSE GEN
F30NGT
PULSE DL CONTROL
SYSTEM CLOCK
MCK
SHIFT REGISTER
IC224
PAL
NTSC
IC205, IC213, 207
PULSE DL
VR203
SYS SC PHASE
IC203
IFRM
INCM
RSVO
30Hz
HZ30
ADV1
ADV2
DUBL
INCM DET
EQP
EXCF
LNCF
CNCF
TCCF
CSCF
DBCF
RFCF
SEL1
SEL2
SEL3
IFR2
MODE SELECT
1/2
PULSE DL (COUNTER)
RHS
SHP1
WINDOW PULSE GEN
WND1
CK1
DBCF
COUNTER
EXCF
HSEL
HO2
RFRM
WSC
2fsc
4fsc FS1
SCO1
SCDL
VXO1
R BST
RBF
TP207
TP208
TP1
TP2
DET1
DET2
DET3
SCH DET
CF PULSE GEN
LAL1
PFB1
SELFRM
SC12
1/4
VXO3
FS3
SC3
SDET
H SHIFT PULSE GEN
HSF2
VPH1
VPH2
HR2
HP20
PAL P
PAL SW
TIMING SHIFTER
FS2
ER1
ER2
VIDEO POSITION
VID1
VID2
VID3
VID4
SHP2
WND2
CK2
IC207, 214
H RESET PULSE GEN
VR205
H PHASE
IC214
IC212
IC204 <<SYNCHRONIZING SIGNAL GEN>>
SC0
SC1
SC GEN
4SC
SC C1
SC C2
SIGNAL DET
ADVF
ESYNC
V SYNC SEP
H PULSE GEN (0.5H ELIMINATOR)
RHS
HR
HO2
HO
CK1
H SYNC GEN
SHP1
HSEL
SRCL
SRCH
+5VS
TRP
LAL1
PFBW
IFR2
SERVO REF SIGNAL GEN
RPH
ADV2
13.5MHz
CK2
COUNTER
DL
PULSE GEN
SHP2
VPH1
VPH2
COMPOSITE SYNC GEN
V SYNC GEN
IC220
SELFRM
IC219
LATCH
ADVF
IC213
BUFFER
IC215
DC VOLTAGE GEN
VR204
SCH PHASE
X202
VCO (4fsc)
IC223
RFRM
R4SC
TO VIDEO 3 2/2
IC222
VD
P5-12
P5-12 (VIDEO 4)
RSC
SEARCH
16A
IC220, 223
IC212
S DET
FRAM DET
OUTPUT LATCH
VSP
CSI
ADBF
CBK
VP
VIP
RFRM
P5-13
P5-8
R2FH
P5-14
P5-13 (VIDEO 4)
P5-8 (VIDEO 4)
P5-14 (VIDEO 4)
RSYNC
RBF
CBK
TO VIDEO 3 2/2
IC221
26B
RVP
25A
VP
P5-7
VIP
P5-11
P11-12 —— P416-5 (SYSCON & TC)
P5-7 (VIDEO 4)
P5-11 (VIDEO 4)
IC214
TP210
FRAMING DET
CF
PAL P
EX CF
PAL SW
CLAMP
30Hz
YNBK
CNBK
RDHD
P5-5
P5-10
24B
P5-9
P5-6
P11-11 —— P416-6 (SYSCON & TC)
P5-5 (VIDEO 4)
P5-10 (VIDEO 4)
READHD
SHP
P5-9 (VIDEO 4)
P5-6 (VIDEO 4)
TP209
RSVO
FRAMING
24A
P1-28 —— P504-28 (SERVO)
REF CF
23A
P1-29 —— P504-29 (SERVO)
RFCF
SFCK
TO VIDEO 3 1/2
TP211
YRCK
P5-17
CK2
P5-18
P5-17 (VIDEO 4)
P5-18 (VIDEO 4)
H PHA
IC216
BUFFER
IC213
GATE

BLK—10

VIDEO 3 BLOCK DIAGRAM (2/2)

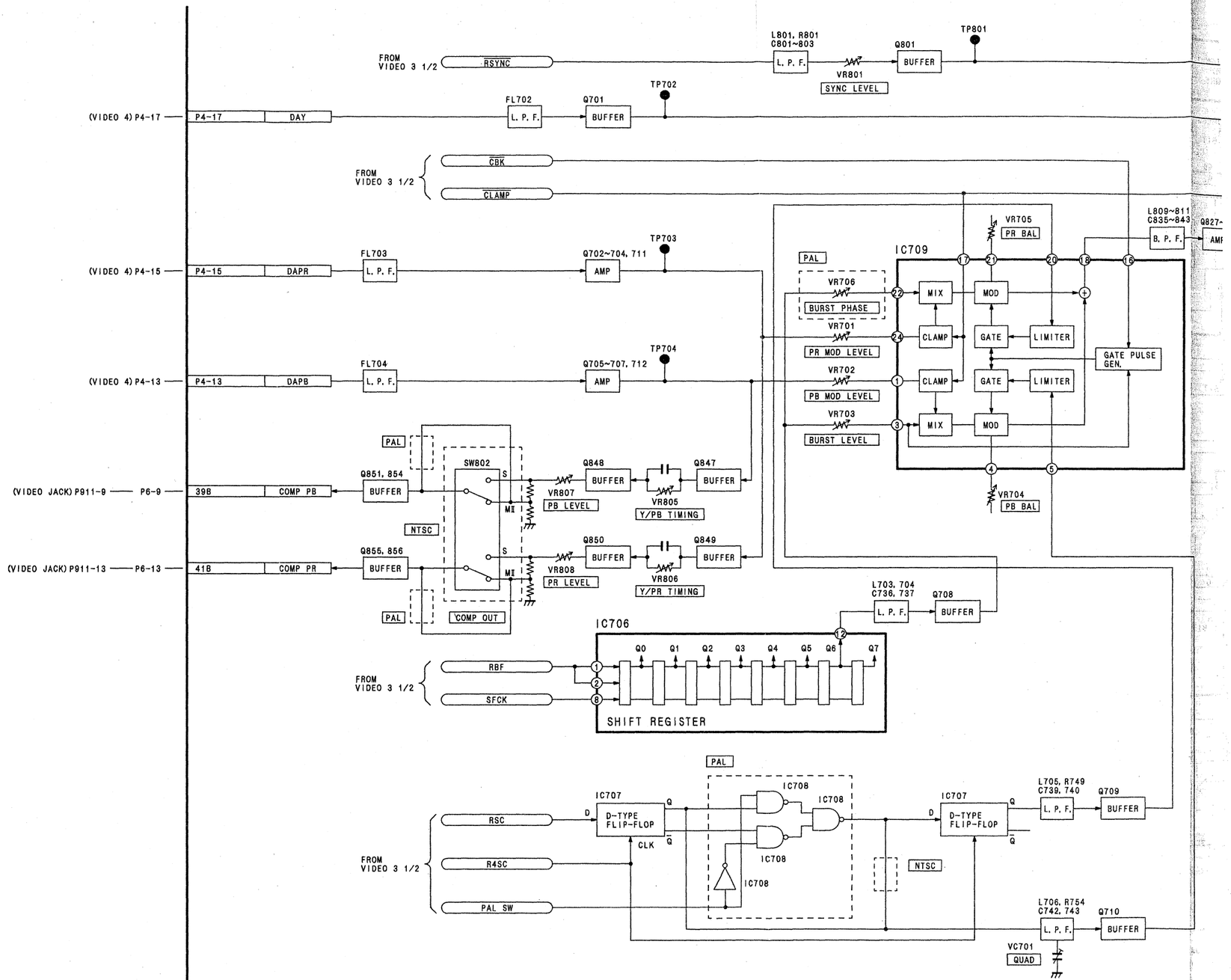

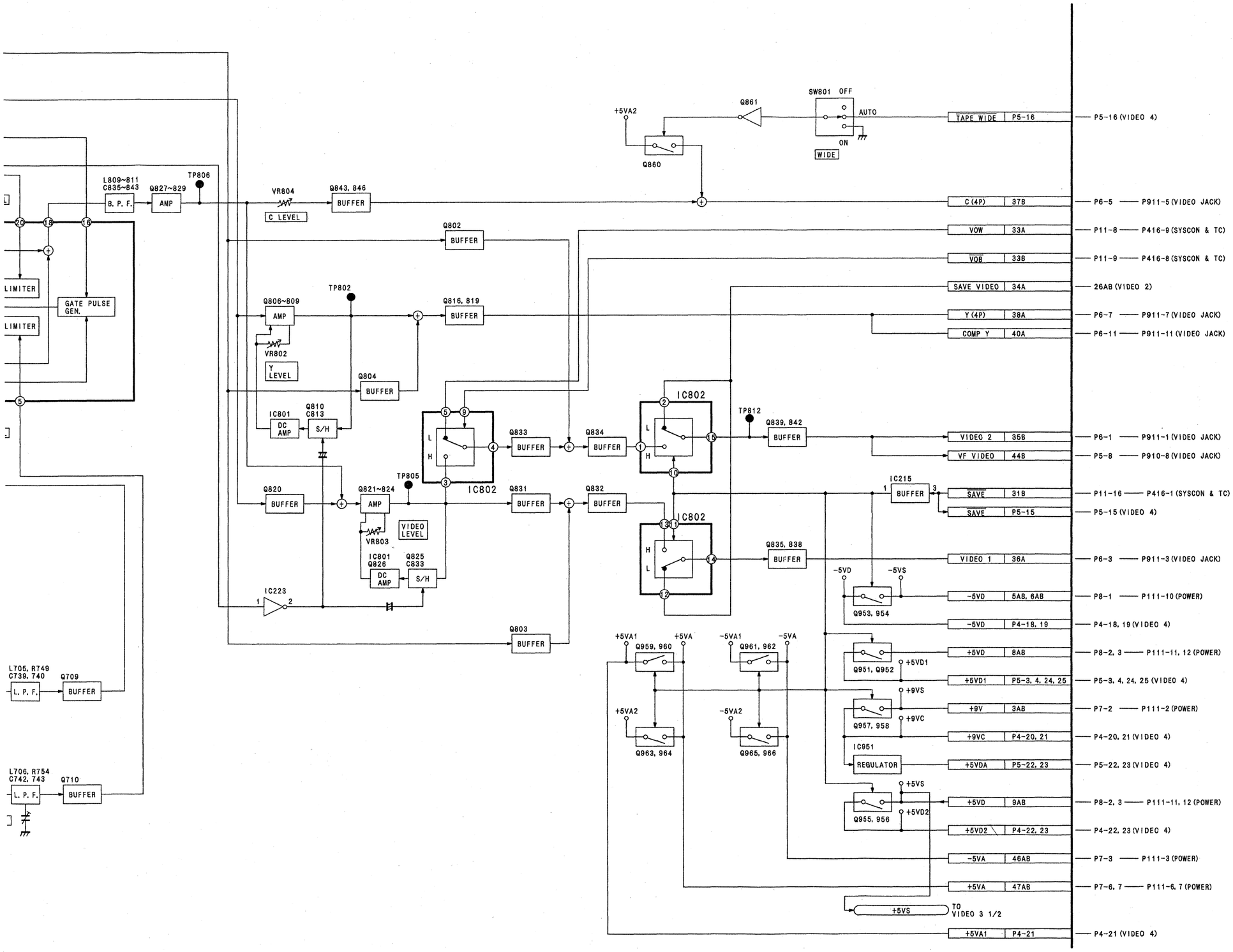
L809~811
C835~843
B. P. F.
Q827~829
AMP
TP806
VR804
C LEVEL
Q843, 846
BUFFER
+5VA2
Q861
SW801 OFF
AUTO
ON
Q860
WIDE
TAPE WIDE P5-16
P5-16 (VIDEO 4)
C (4P) 37B
P6-5 —— P911-5 (VIDEO JACK)
Q802
BUFFER
VOW 33A
P11-8 —— P416-9 (SYSCON & TC)
VOB 33B
P11-9 —— P416-8 (SYSCON & TC)
SAVE VIDEO 34A
26AB (VIDEO 2)
LIMITER
GATE PULSE GEN.
LIMITER
TP802
Q806~809
AMP
VR802
Y LEVEL
Q816, 819
BUFFER
Y (4P) 38A
P6-7 —— P911-7 (VIDEO JACK)
COMP Y 40A
P6-11 —— P911-11 (VIDEO JACK)
Q804
BUFFER
IC801
DC AMP
Q810
C813
S/H
IC802
TP812
Q839, 842
BUFFER
VIDEO 2 35B
P6-1 —— P911-1 (VIDEO JACK)
VF VIDEO 44B
P5-8 —— P910-8 (VIDEO JACK)
TP805
IC802
IC215
BUFFER
SAVE 31B
P11-16 —— P416-1 (SYSCON & TC)
SAVE P5-15
P5-15 (VIDEO 4)
Q820
BUFFER
Q821~824
AMP
VR803
VIDEO LEVEL
IC801
Q826
DC AMP
Q825
C833
S/H
Q831
BUFFER
Q832
BUFFER
IC802
Q835, 838
BUFFER
VIDEO 1 36A
P6-3 —— P911-3 (VIDEO JACK)
IC223
-5VD
-5VS
Q953, 954
-5VD 5AB, 6AB
P8-1 —— P111-10 (POWER)
-5VD P4-18, 19
P4-18, 19 (VIDEO 4)
Q803
BUFFER
+5VA1
Q959, 960
+5VA
-5VA1
Q961, 962
-5VA
+5VD
8AB
P8-2, 3 —— P111-11, 12 (POWER)
Q951, Q952
+5VD1
+5VD1 P5-3, 4, 24, 25
P5-3, 4, 24, 25 (VIDEO 4)
+5VA2
-5VA2
+9VS
+9V 3AB
P7-2 —— P111-2 (POWER)
Q957, 958
+9VC
+9VC P4-20, 21
P4-20, 21 (VIDEO 4)
Q963, 964
Q965, 966
IC951
REGULATOR
+5VDA P5-22, 23
P5-22, 23 (VIDEO 4)
+5VS
+5VD 9AB
P8-2, 3 —— P111-11, 12 (POWER)
Q955, 956
+5VD2
+5VD2 P4-22, 23
P4-22, 23 (VIDEO 4)
-5VA 46AB
P7-3 —— P111-3 (POWER)
+5VA 47AB
P7-6, 7 —— P111-6, 7 (POWER)
+5VS
TO VIDEO 3 1/2
+5VA1 P4-21
P4-21 (VIDEO 4)
L705, R749
C739, 740
Q709
L. P. F.
BUFFER
L706, R754
C742, 743
Q710
L. P. F.
BUFFER

VIDEO 4 BLOCK DIAGRAM (1/2)

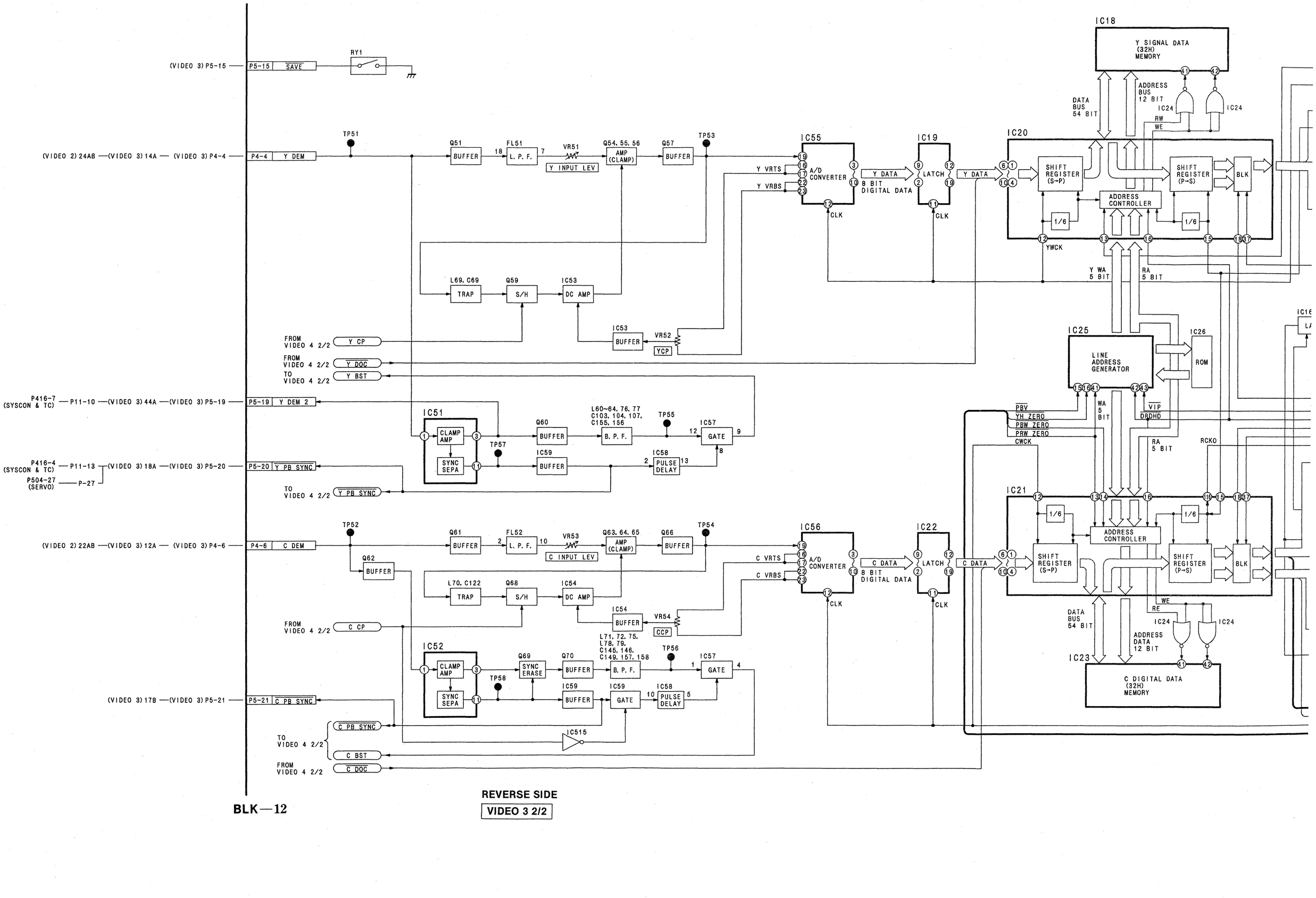

REVERSE SIDE

VIDEO 3 2/2

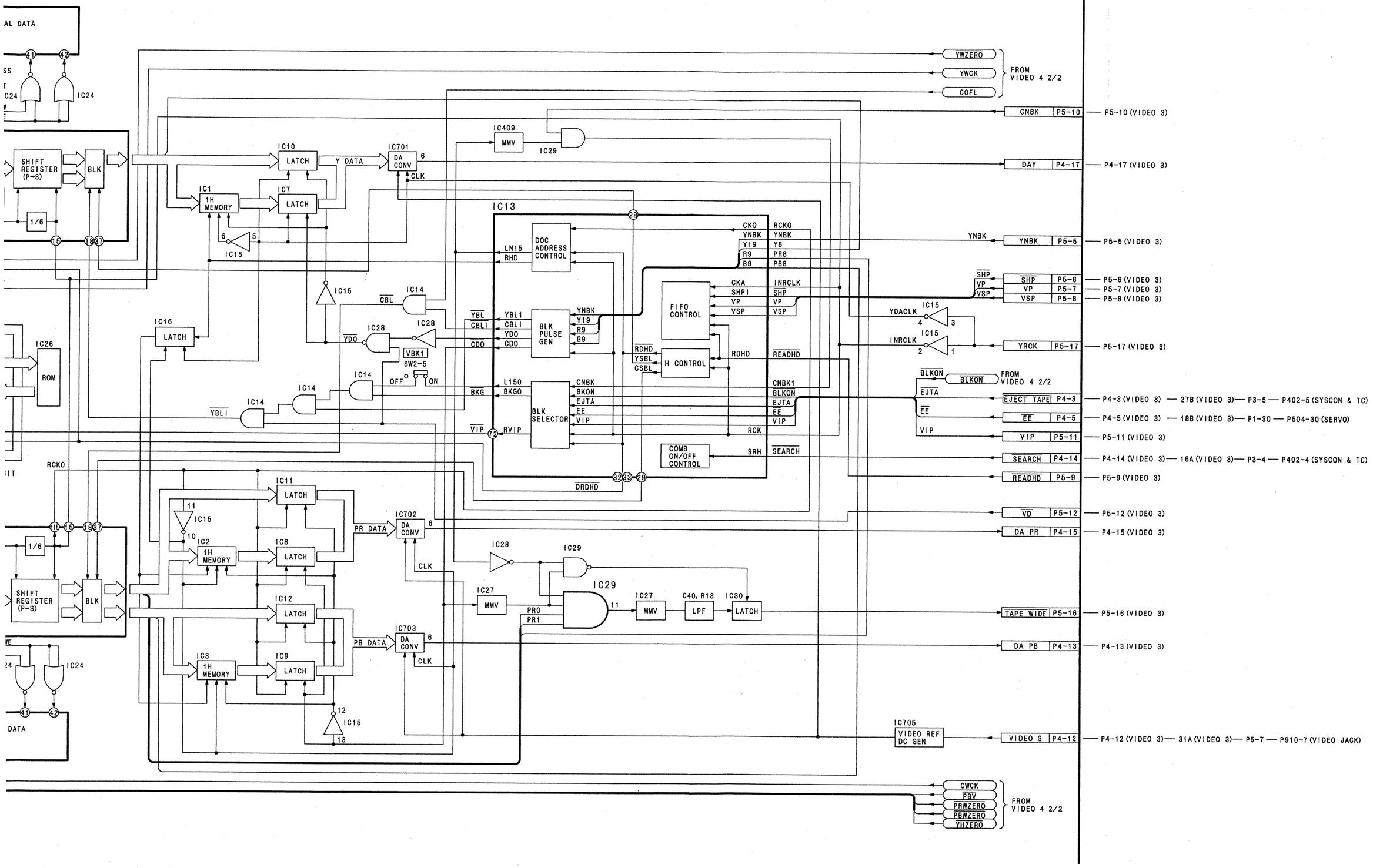
AL DATA
SS
T
C24
IC24
SHIFT REGISTER (P→S)
BLK
1/6
IC1
1H MEMORY
IC10
LATCH
IC7
LATCH
Y DATA
IC701
DA CONV
CLK
IC409
MMV
IC29
IC15
IC14
CBL
IC16
LATCH
IC28
YDO
VBK1
SW2-5
OFF
ON
IC26
ROM
IC14
YBLI
VIP
RCKO
IC11
LATCH
IC2
1H MEMORY
IC8
LATCH
IC12
LATCH
IC3
1H MEMORY
IC9
LATCH
PR DATA
PB DATA
IC702
DA CONV
IC703
DA CONV
IC13
DOC ADDRESS CONTROL
BLK PULSE GEN
BLK SELECTOR
FIFO CONTROL
H CONTROL
COMB ON/OFF CONTROL
DRDHD
IC27
MMV
PR0
PR1
IC29
C40, R13
LPF
IC30
LATCH
IC705
VIDEO REF DC GEN
YDACLK
INRCLK
FROM VIDEO 4 2/2
YWZERO
YWCK
COFL
CWCK
PBV
PRWZERO
PBWZERO
YHZERO
CNBK P5-10
DAY P4-17
YNBK P5-5
SHP P5-6
VP P5-7
VSP P5-8
YRCK P5-17
BLKON
EJECT TAPE P4-3
EE P4-5
VIP P5-11
SEARCH P4-14
READHD P5-9
VD P5-12
DA PR P4-15
TAPE WIDE P5-16
DA PB P4-13
VIDEO G P4-12
P5-10 (VIDEO 3)
P4-17 (VIDEO 3)
P5-5 (VIDEO 3)
P5-6 (VIDEO 3)
P5-7 (VIDEO 3)
P5-8 (VIDEO 3)
P5-17 (VIDEO 3)
P4-3 (VIDEO 3) — 27B (VIDEO 3) — P3-5 — P402-5 (SYSCON & TC)
P4-5 (VIDEO 3) — 18B (VIDEO 3) — P1-30 — P504-30 (SERVO)
P5-11 (VIDEO 3)
P4-14 (VIDEO 3) — 16A (VIDEO 3) — P3-4 — P402-4 (SYSCON & TC)
P5-9 (VIDEO 3)
P5-12 (VIDEO 3)
P4-15 (VIDEO 3)
P5-16 (VIDEO 3)
P4-13 (VIDEO 3)
P4-12 (VIDEO 3) — 31A (VIDEO 3) — P5-7 — P910-7 (VIDEO JACK)

VIDEO 4 BLOCK DIAGRAM (2/2)

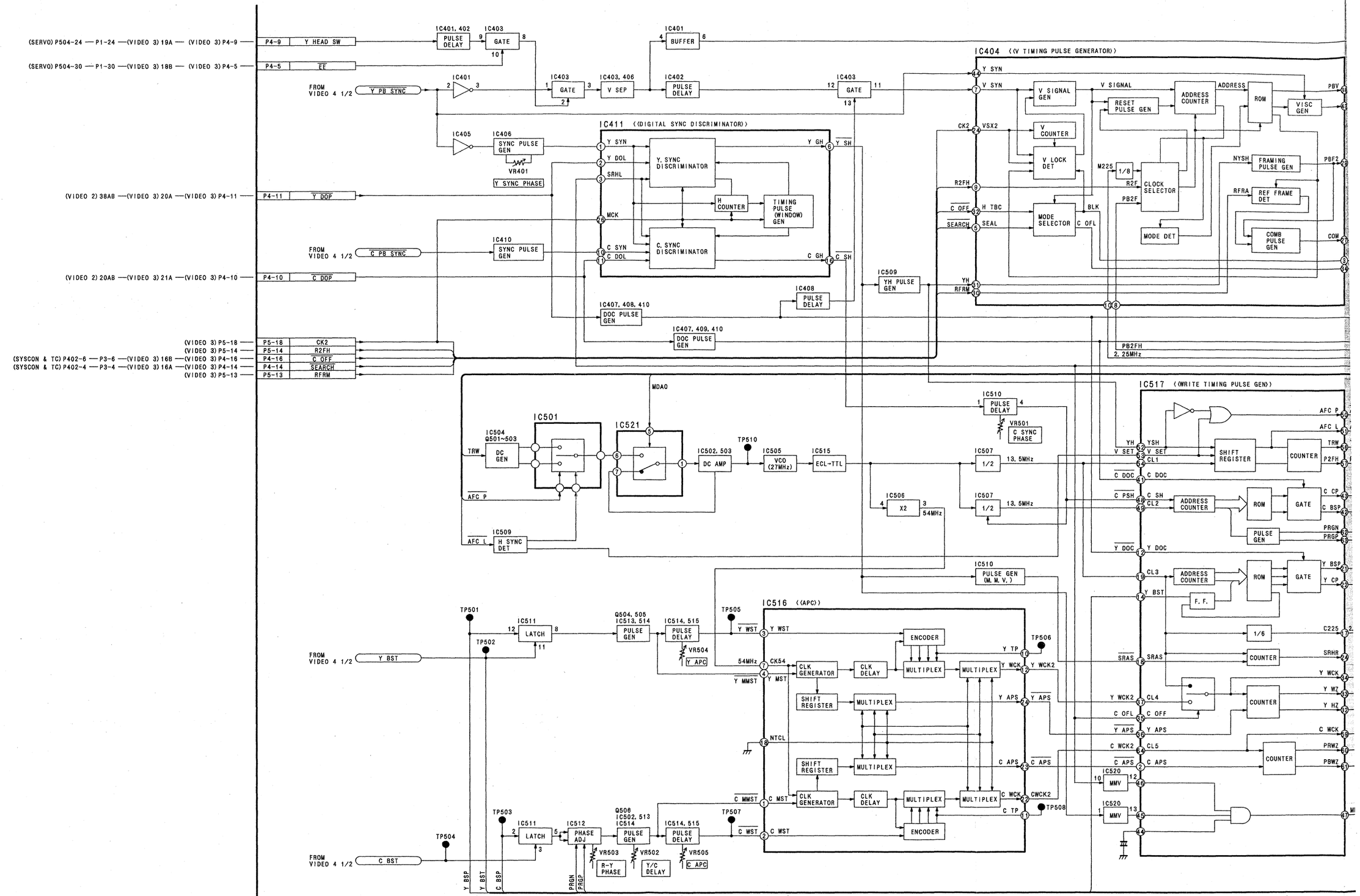

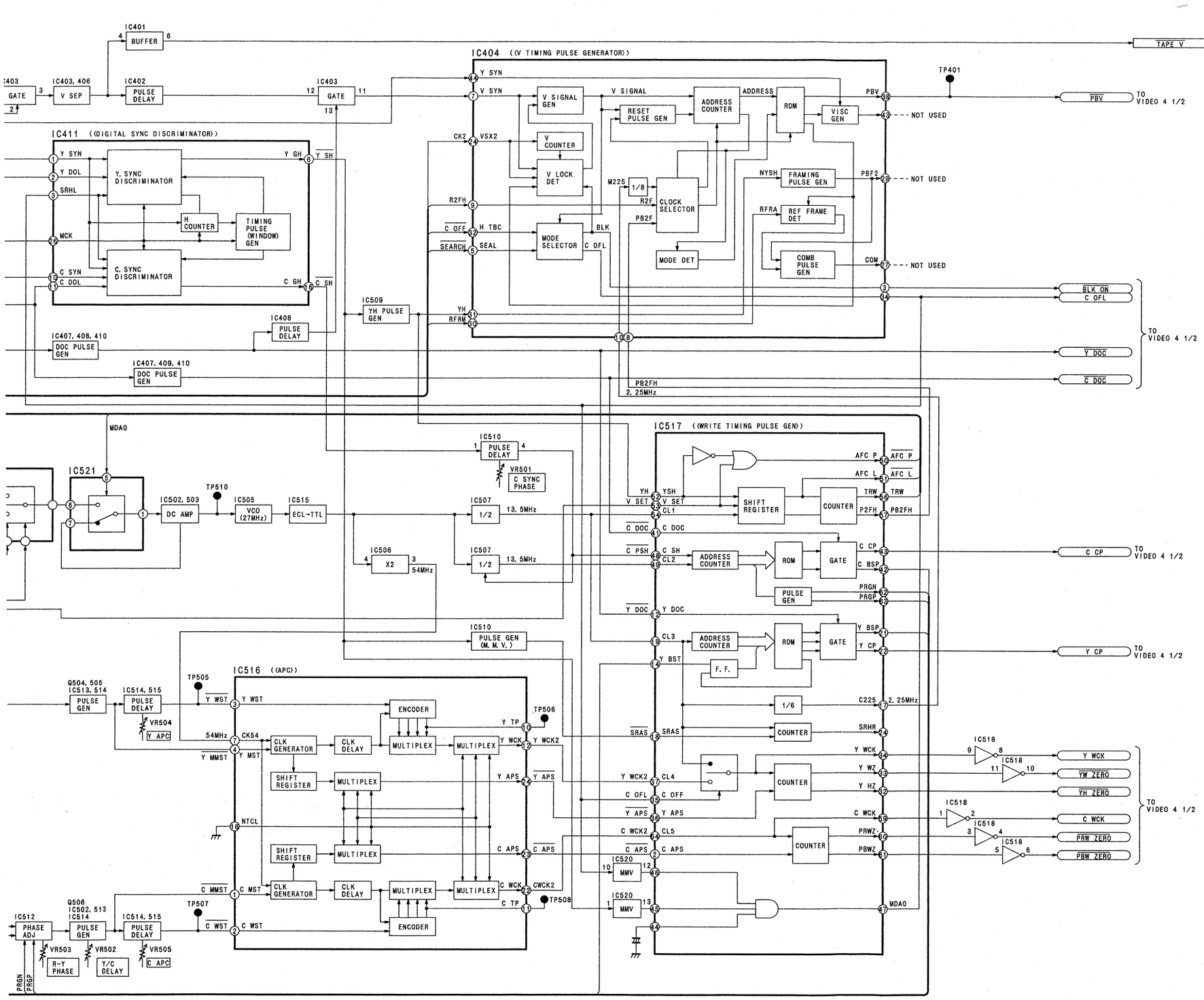

BLK—13

REVERSE SIDE
AUDIO 1/2

AUDIO BLOCK DIAGRAM (1/2)

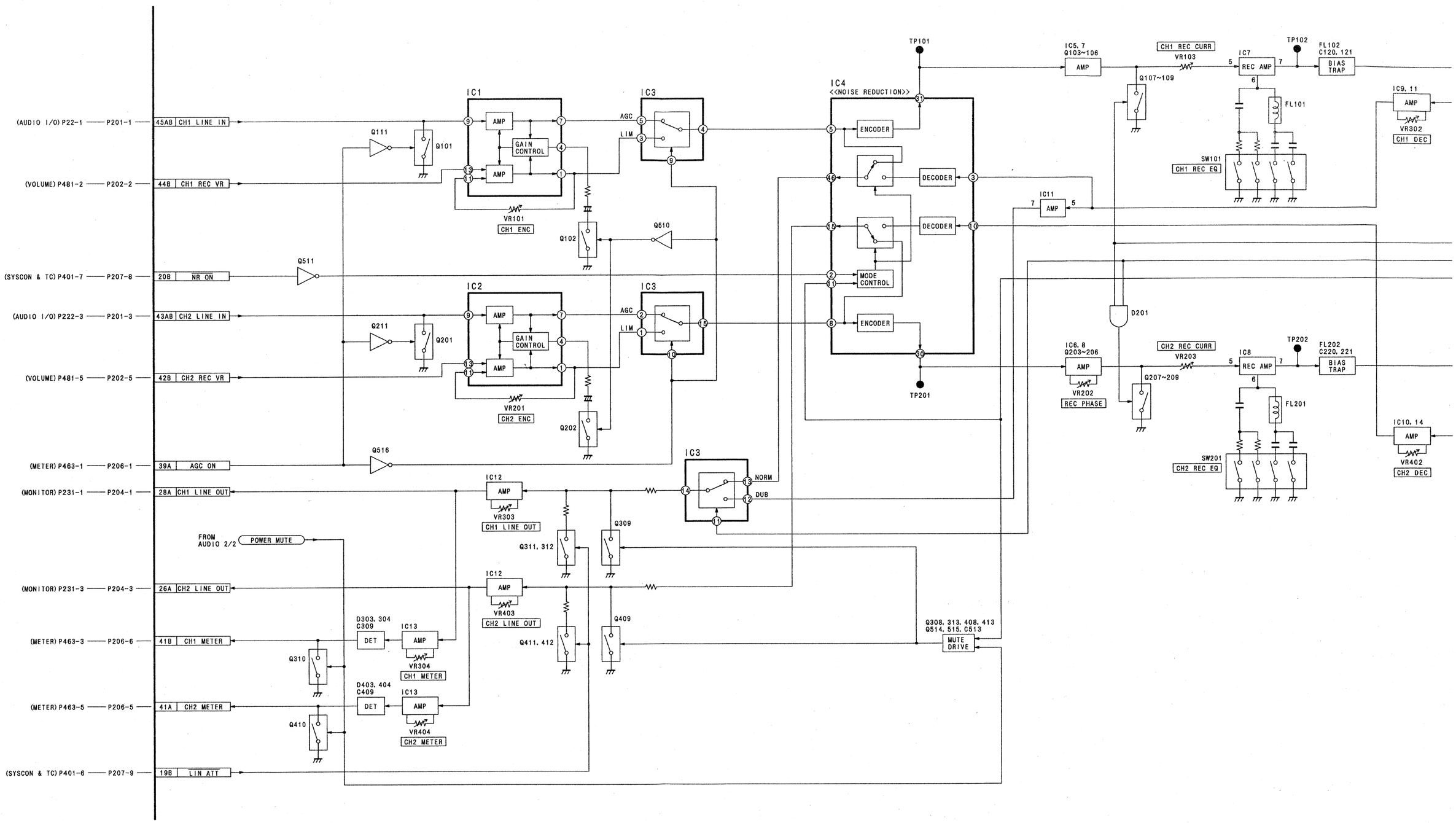

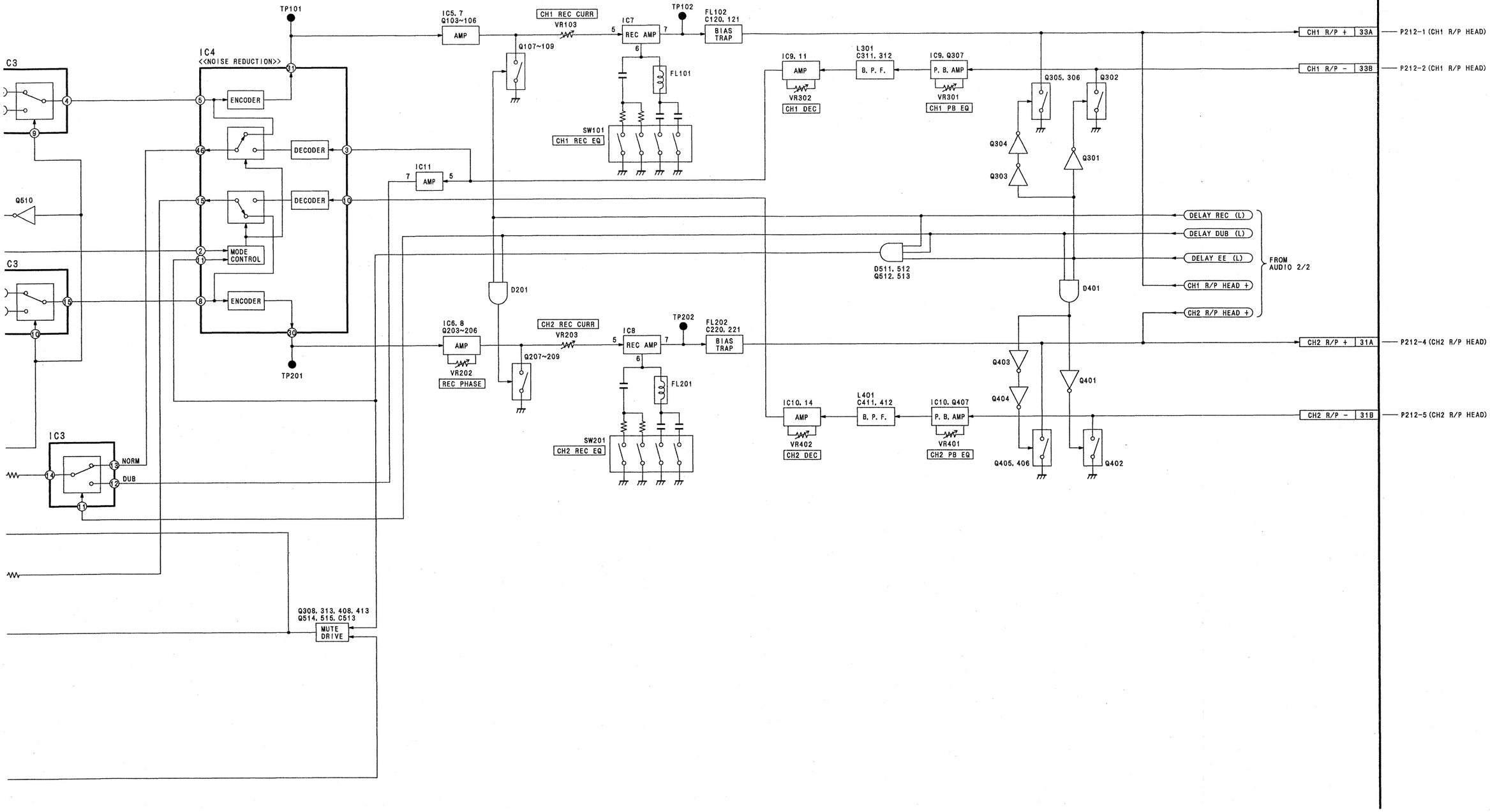
TP101
IC4
<<NOISE REDUCTION>>
C3
ENCODER
DECODER
DECODER
MODE CONTROL
ENCODER
TP201
Q610
C3
IC3
NORM
DUB
IC5, 7
Q103~106
AMP
CH1 REC CURR
VR103
Q107~109
IC7
REC AMP
TP102
FL102
C120, 121
BIAS TRAP
FL101
SW101
CH1 REC EQ
IC11
AMP
D201
IC6, 8
Q203~206
AMP
VR202
REC PHASE
CH2 REC CURR
VR203
Q207~209
IC8
REC AMP
TP202
FL202
C220, 221
BIAS TRAP
FL201
SW201
CH2 REC EQ
IC9, 11
AMP
VR302
CH1 DEC
L301
C311, 312
B. P. F.
IC9, Q307
P. B. AMP
VR301
CH1 PB EQ
Q305, 306
Q302
Q304
Q303
Q301
D511, 512
Q512, 513
D401
DELAY REC (L)
DELAY DUB (L)
DELAY EE (L)
CH1 R/P HEAD +
CH2 R/P HEAD +
FROM AUDIO 2/2
IC10, 14
AMP
VR402
CH2 DEC
L401
C411, 412
B. P. F.
IC10, Q407
P. B. AMP
VR401
CH2 PB EQ
Q403
Q404
Q401
Q405, 406
Q402
CH1 R/P + 33A
CH1 R/P - 33B
CH2 R/P + 31A
CH2 R/P - 31B
P212-1 (CH1 R/P HEAD)
P212-2 (CH1 R/P HEAD)
P212-4 (CH2 R/P HEAD)
P212-5 (CH2 R/P HEAD)
Q308, 313, 408, 413
Q514, 515, C513
MUTE DRIVE

AUDIO BLOCK DIAGRAM (2/2)

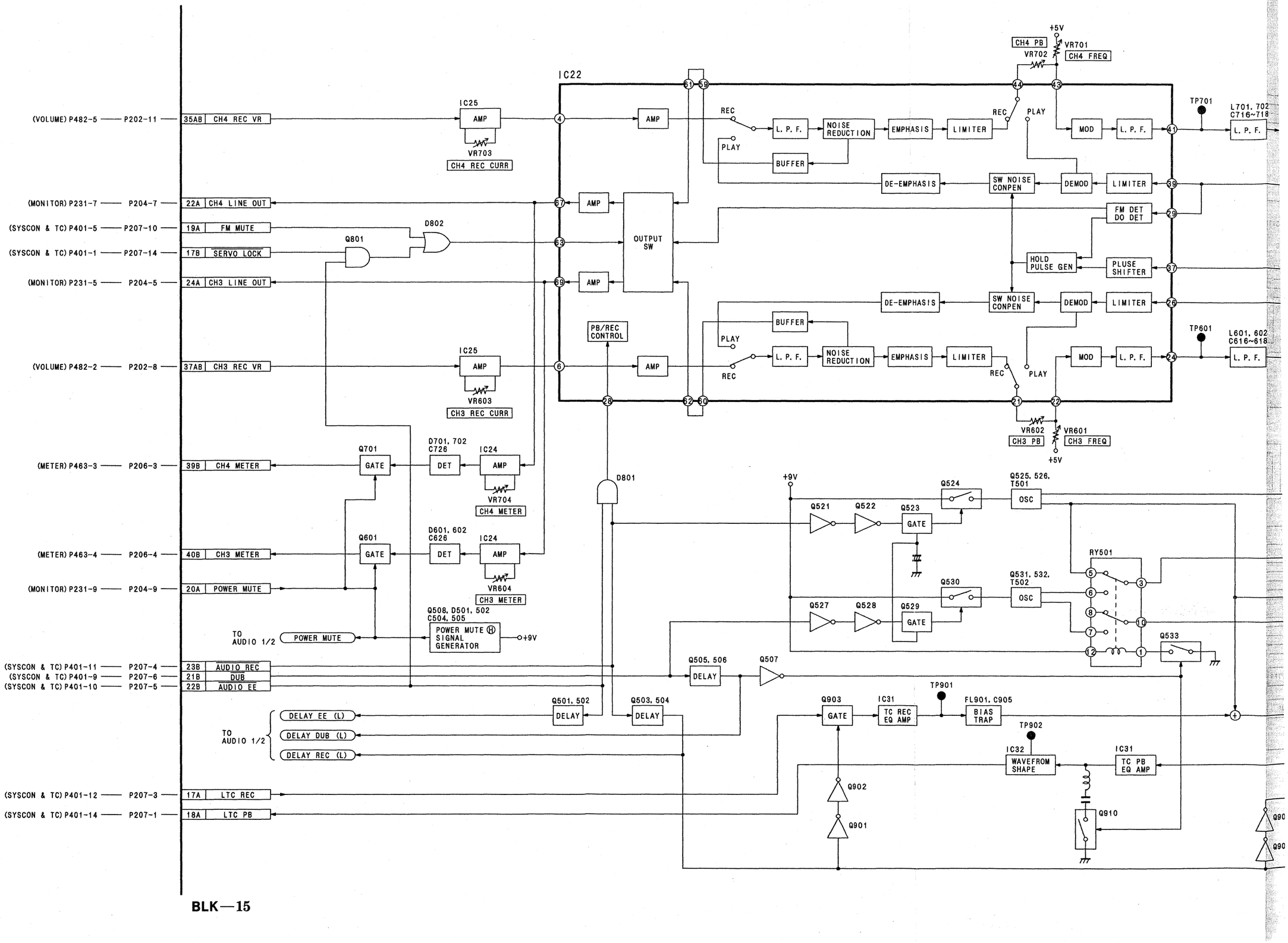

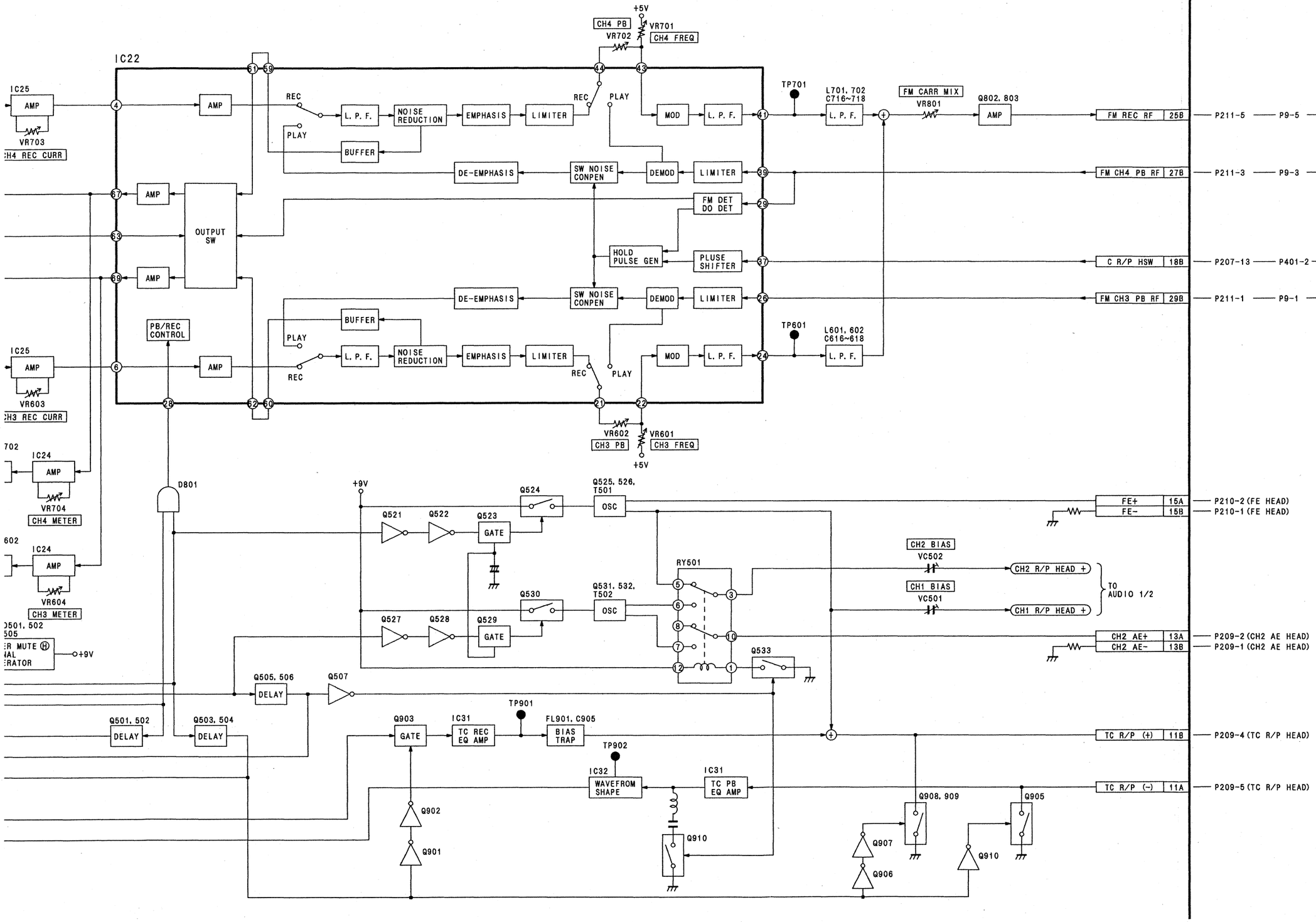

REVERSE SIDE
VIDEO JACK/VOLUME

VIDEO JACK BLOCK DIAGRAM

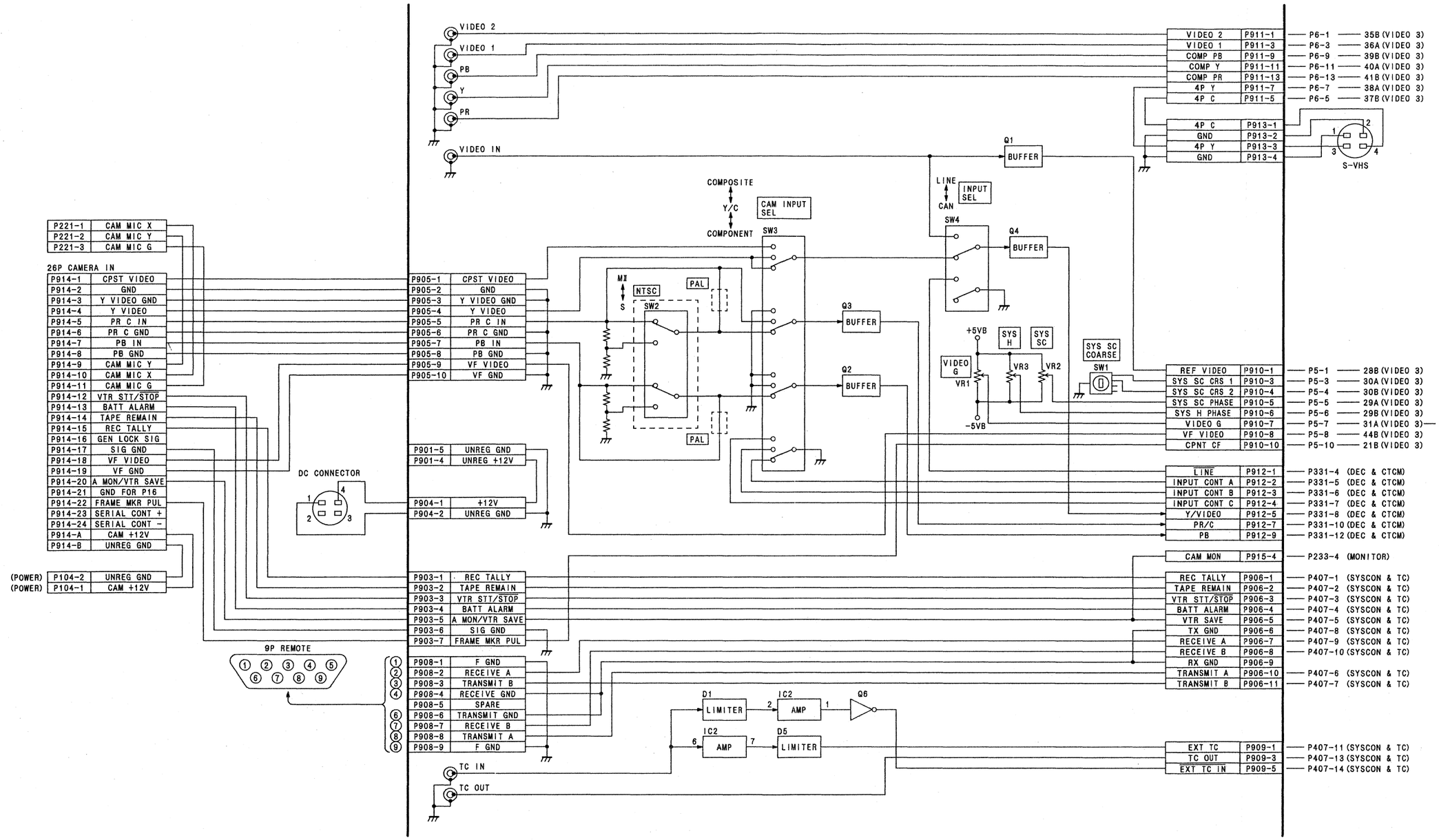

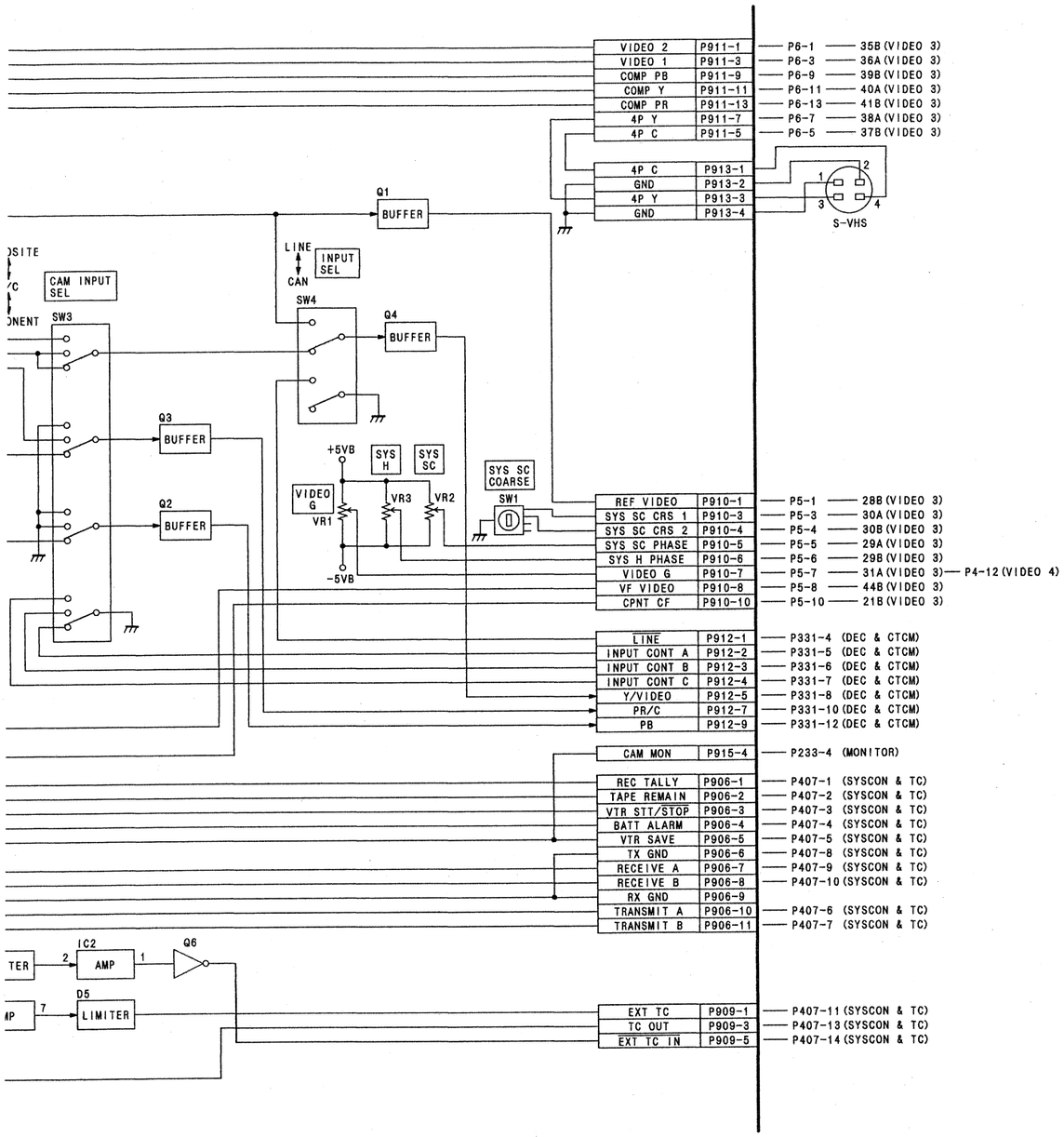

VOLUME BLOCK DIAGRAM

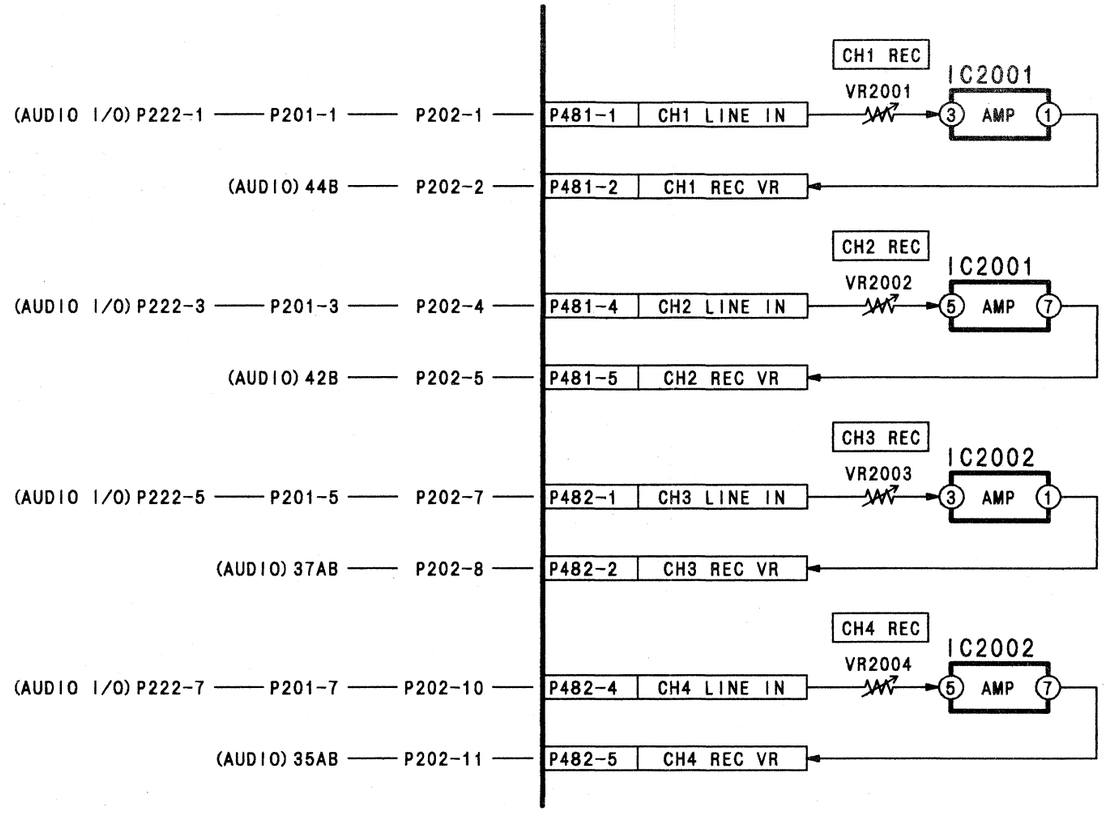

AUDIO I/O BLOCK DIAGRAM

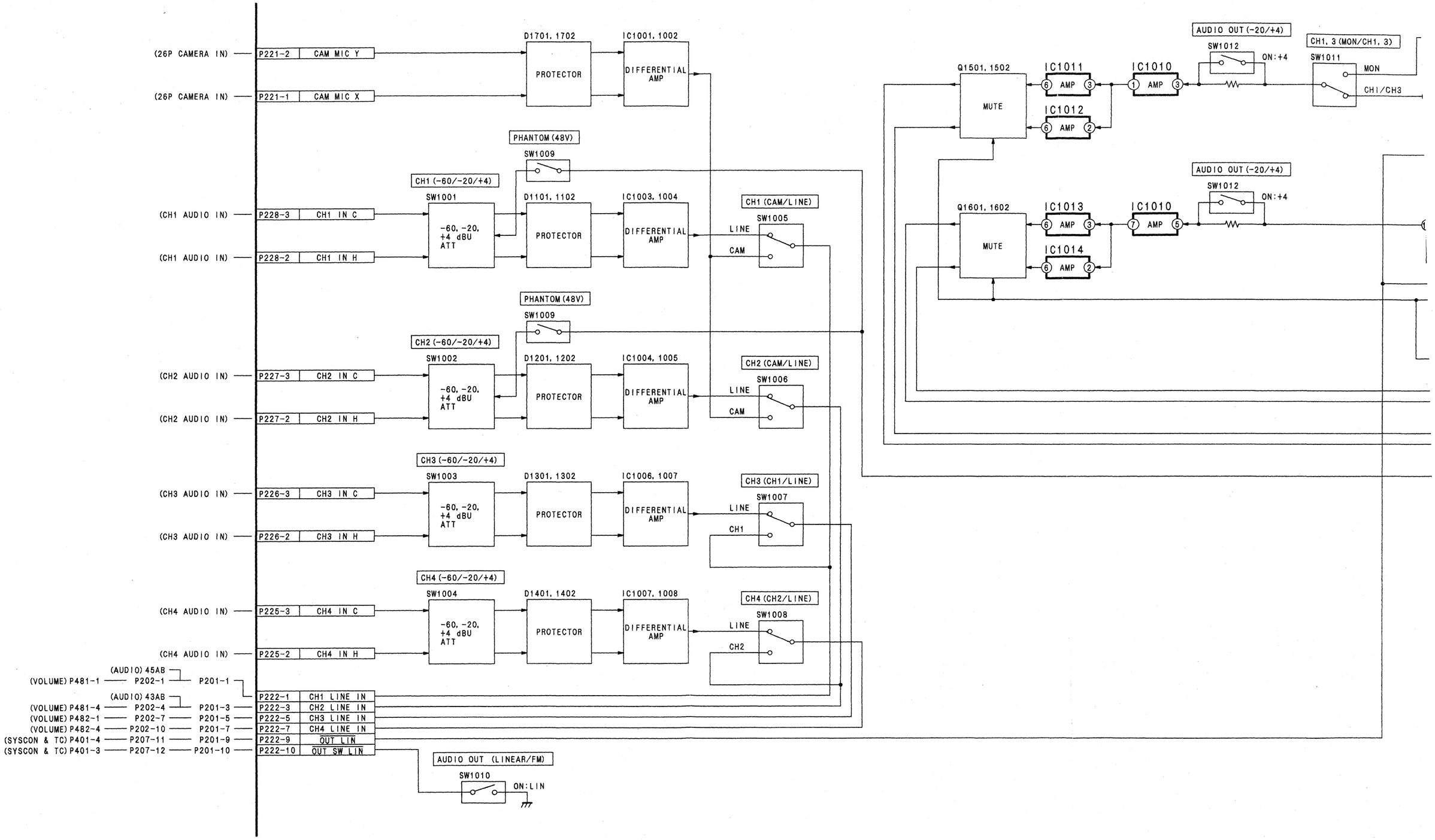

MONITOR/MONITOR VR/HEADPHONES BLOCK DIAGRAM

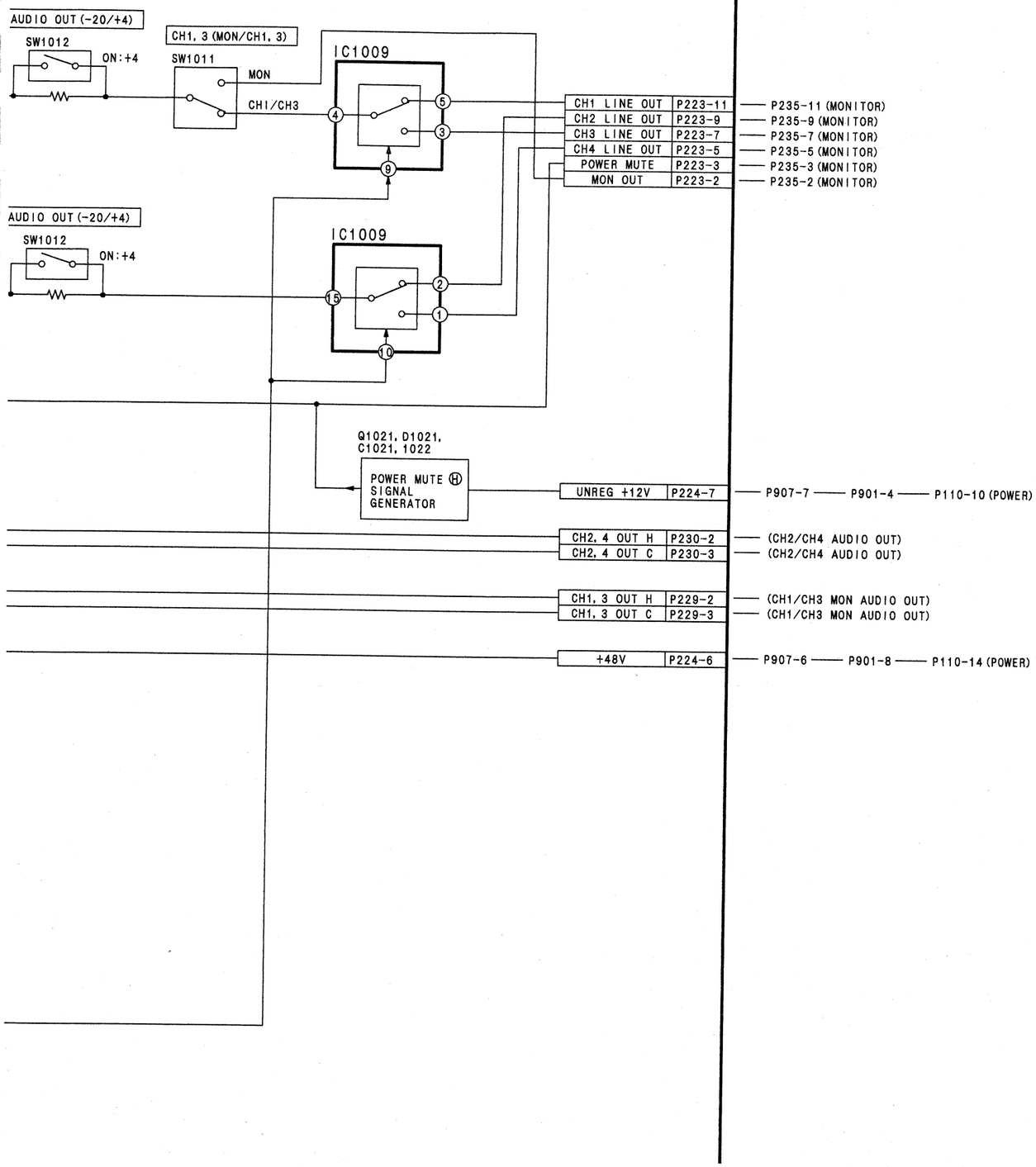

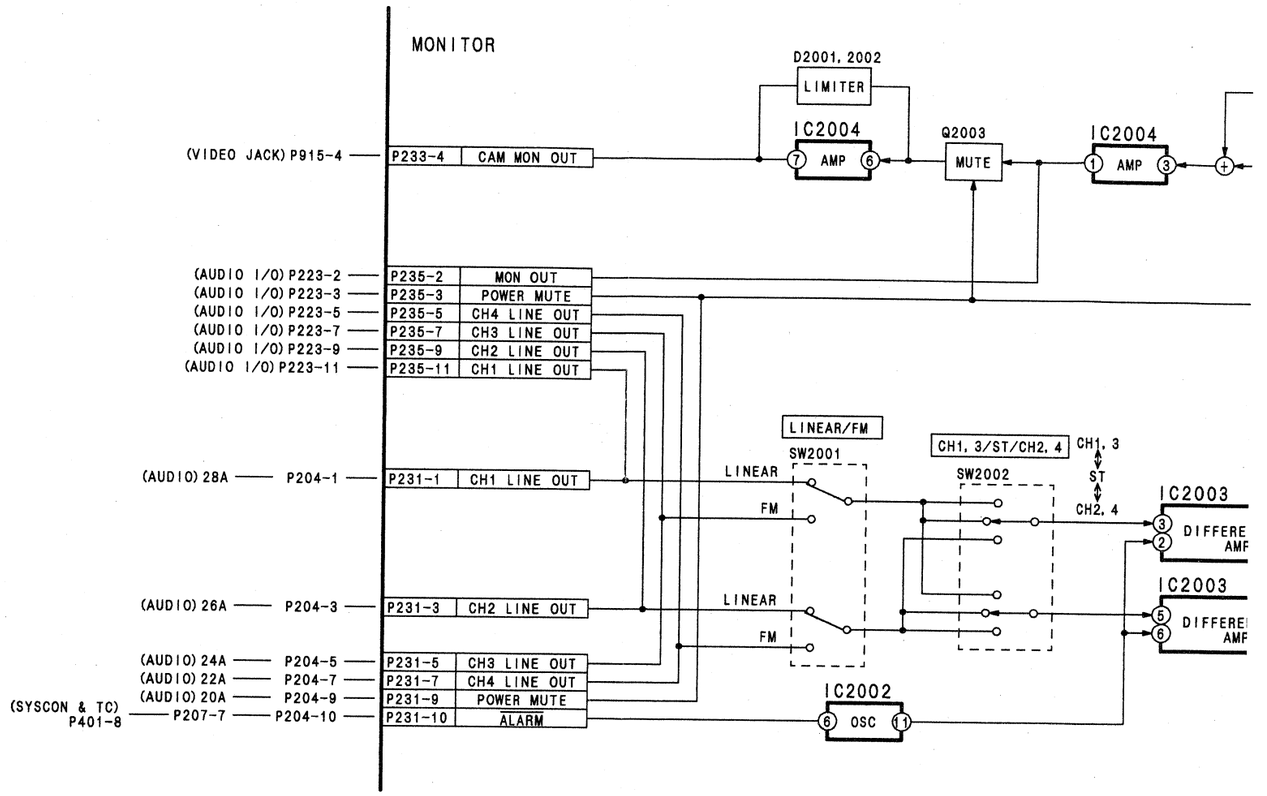

MONITOR/MONITOR VR/HEADPHONES BLOCK DIAGRAM

P235-11 (MONITOR)
P235-9 (MONITOR)
P235-7 (MONITOR)
P235-5 (MONITOR)
P235-3 (MONITOR)
P235-2 (MONITOR)

'907-7 —— P901-4 —— P110-10 (POWER)

CH2/CH4 AUDIO OUT)
CH2/CH4 AUDIO OUT)

CH1/CH3 MON AUDIO OUT)
CH1/CH3 MON AUDIO OUT)

907-6 —— P901-8 —— P110-14 (POWER)

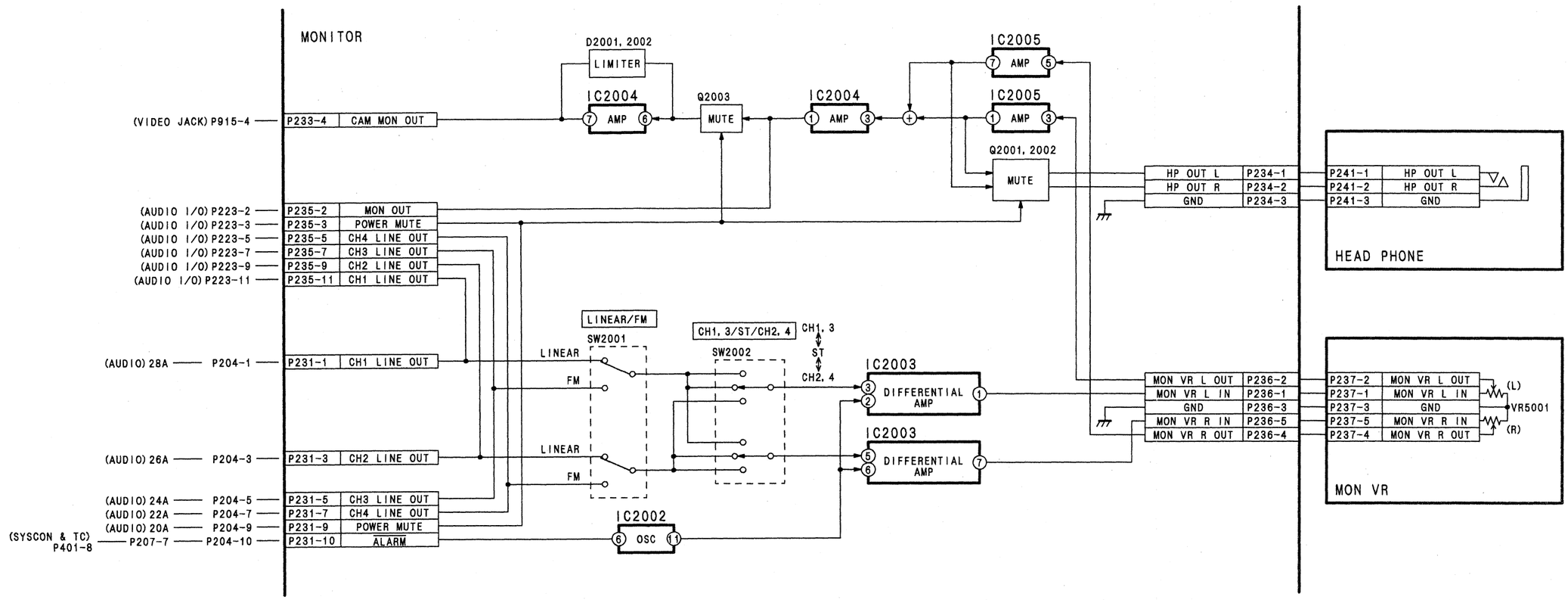

REVERSE SIDE
SERVO 1/2

SERVO BLOCK DIAGRAM (1/2)

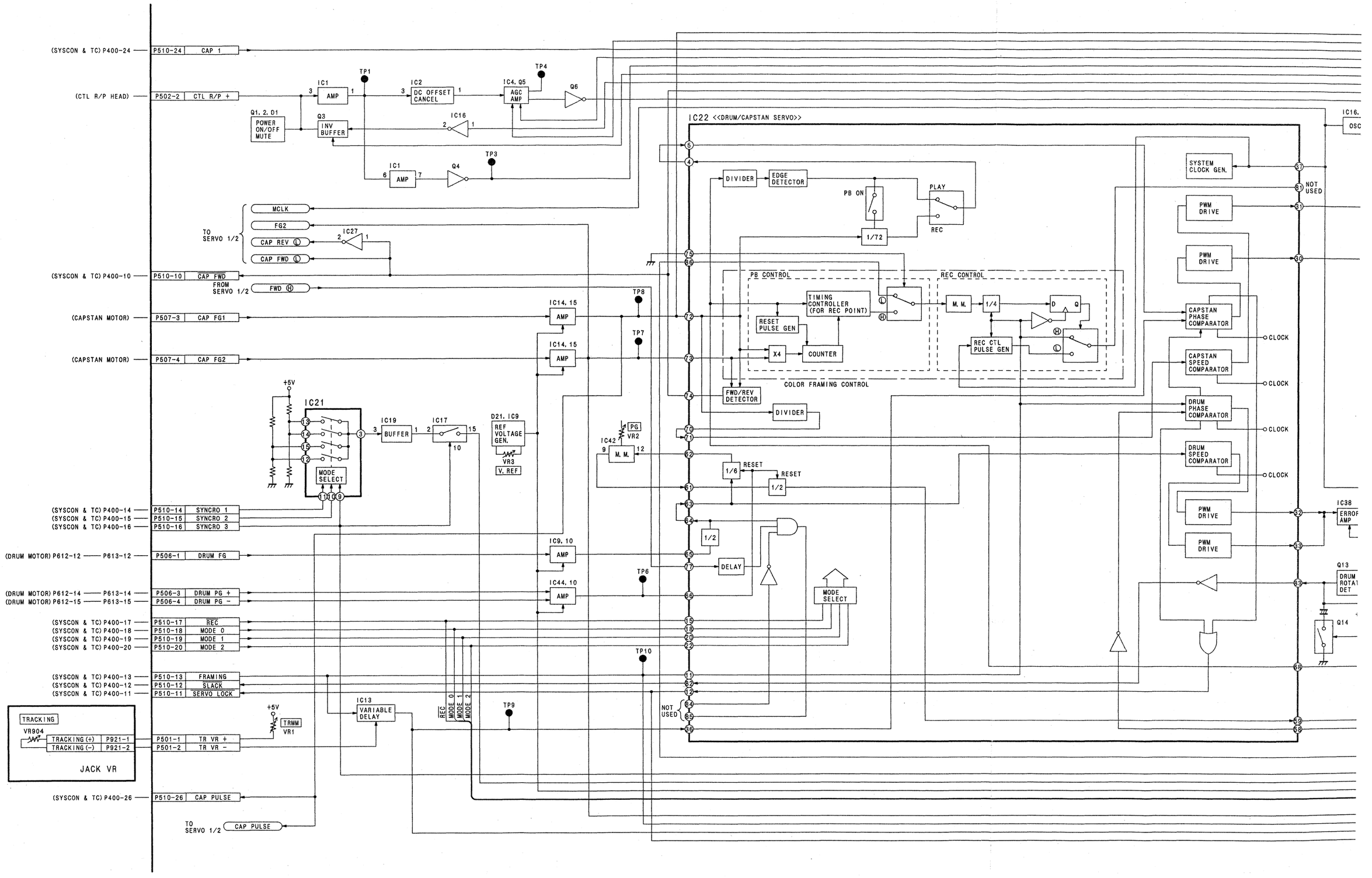

IC16. X1
OSC
SYSTEM CLOCK GEN.
NOT USED
PWM DRIVE
PWM DRIVE
PWM DRIVE
PWM DRIVE
PWM DRIVE
PLAY
REC
REC CONTROL
M. M.
1/4
D Q
REC CTL PULSE GEN
CAPSTAN PHASE COMPARATOR
CAPSTAN SPEED COMPARATOR
DRUM PHASE COMPARATOR
DRUM SPEED COMPARATOR
CLOCK
CLOCK
CLOCK
CLOCK
IC38
ERROR AMP
TP18
Q13
DRUM ROTATION DET
Q14
+9V
IC5
IC6
IC8
CTL CYCLE DET SPEED DET LESS THAN 1/2 (L)
GATE
IC43
RESET PULSE GENERATOR
IC8
GAIN PRESET (NOISE MUTE)
IC16
IC5
IC43
TIMING PULSE GENERATOR
IC34
M. M. V.
IC36
IC25 <<CTL PULSE GEN>>
GATE
CTL PULSE GENERATOR
SLOW SPEED (L)
FG MARK ON/OFF
CK
FG UP & DOWN COUNTER (FOR WINDOW SIG)
CTL WINDOW PULSE
RESET
POWER ON RESET
COUNTER CONTROL (UP OR DOWN)
CLK
Q15
D11, R54
Q8
GATE
Q7
IC20
MODE 0
MODE 1
MODE 2
REC
MODE SELECT
D12
D14
D13, IC16
D15
IC37
NTSC
PAL
IC40, X2
OSC
IC17
IC34
M. M. V.
IC36
IC42
M. M. V.
IC23 <<CTL MOD SELECTION>>
FG1
FG2
PB CTL
CF30IN
CF15IN
X4
PULSE GEN
1/2
1/2
NTSC
PAL
CTL DUTY MODULATION
PB OUT
D OUT 1
D OUT 2
REC OUT
CLK
IC27
BUFFER
Q10
IC11~13, 27~32
Q11, 12
CF SERVO CIRCUIT
PWM IN
PWM OUT
CAPLSD
2F
TAPE CF
CTL REC
D OUT
FRAMING
SERVO LOCK
CF ON/OFF SELECT & CF PHASE CONTROL
CF LOCK
CF MODE

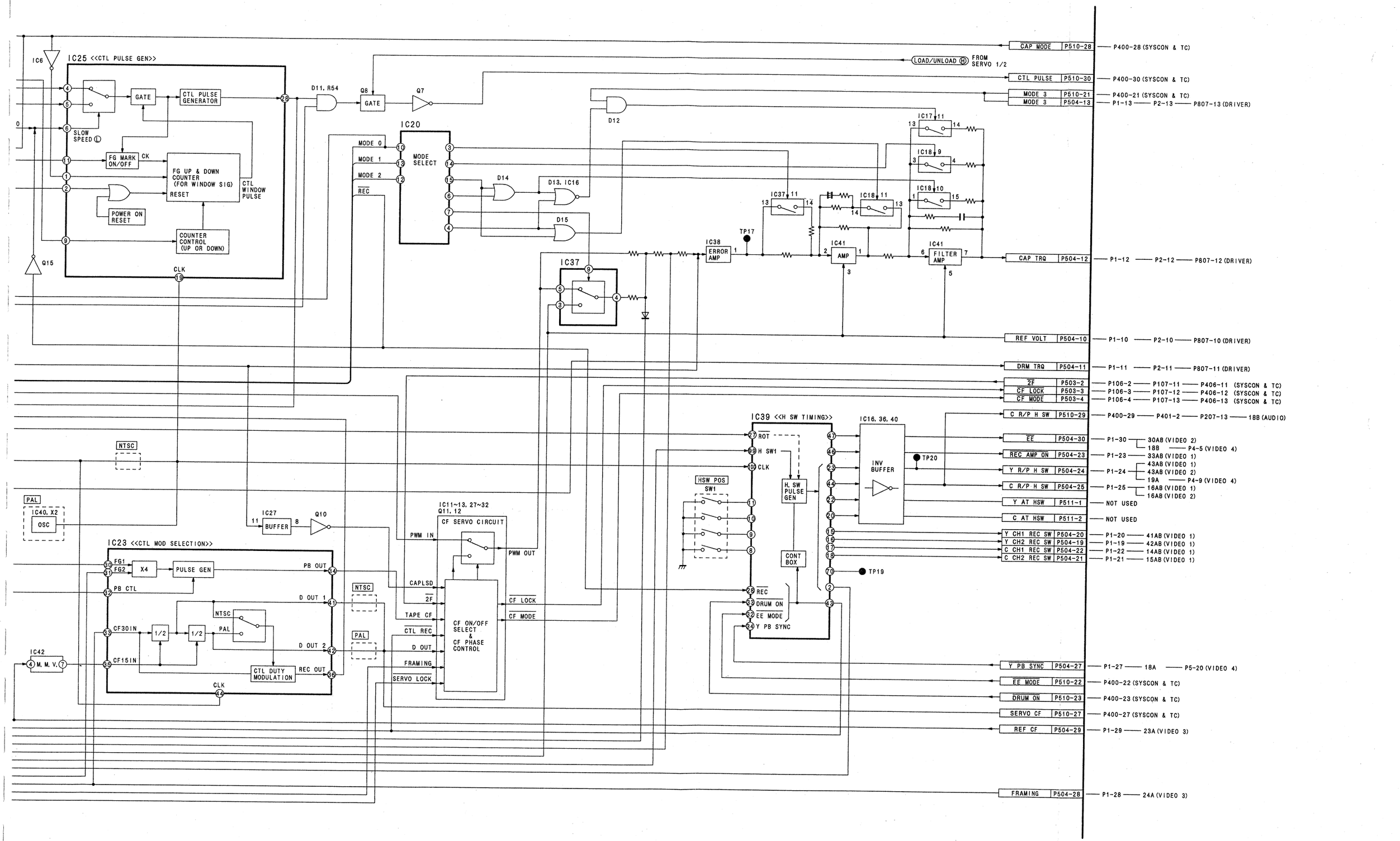
IC6
IC25 <<CTL PULSE GEN>>
GATE
CTL PULSE GENERATOR
SLOW SPEED (L)
FG MARK ON/OFF
CK
FG UP & DOWN COUNTER (FOR WINDOW SIG)
RESET
CTL WINDOW PULSE
POWER ON RESET
COUNTER CONTROL (UP OR DOWN)
Q15
CLK
D11, R54
Q8
GATE
Q7
IC20
MODE 0
MODE 1
MODE 2
REC
MODE SELECT
D14
D13, IC16
D15
D12
IC37
IC38
ERROR AMP
TP17
IC37
IC18
IC41
AMP
FILTER AMP
IC17
IC18
IC18
CAP MODE P510-28 — P400-28 (SYSCON & TC)
LOAD/UNLOAD (H) FROM SERVO 1/2
CTL PULSE P510-30 — P400-30 (SYSCON & TC)
MODE 3 P510-21 — P400-21 (SYSCON & TC)
MODE 3 P504-13 — P1-13 — P2-13 — P807-13 (DRIVER)
CAP TRQ P504-12 — P1-12 — P2-12 — P807-12 (DRIVER)
REF VOLT P504-10 — P1-10 — P2-10 — P807-10 (DRIVER)
DRM TRQ P504-11 — P1-11 — P2-11 — P807-11 (DRIVER)
2F P503-2 — P106-2 — P107-11 — P406-11 (SYSCON & TC)
CF LOCK P503-3 — P106-3 — P107-12 — P406-12 (SYSCON & TC)
CF MODE P503-4 — P106-4 — P107-13 — P406-13 (SYSCON & TC)
C R/P H SW P510-29 — P400-29 — P401-2 — P207-13 — 18B (AUDIO)
EE P504-30 — P1-30 — 30AB (VIDEO 2) — 18B — P4-5 (VIDEO 4)
REC AMP ON P504-23 — P1-23 — 33AB (VIDEO 1)
Y R/P H SW P504-24 — P1-24 — 43AB (VIDEO 1) — 43AB (VIDEO 2) — 19A — P4-9 (VIDEO 4)
C R/P H SW P504-25 — P1-25 — 16AB (VIDEO 1) — 16AB (VIDEO 2)
Y AT HSW P511-1 — NOT USED
C AT HSW P511-2 — NOT USED
Y CH1 REC SW P504-20 — P1-20 — 41AB (VIDEO 1)
Y CH2 REC SW P504-19 — P1-19 — 42AB (VIDEO 1)
C CH1 REC SW P504-22 — P1-22 — 14AB (VIDEO 1)
C CH2 REC SW P504-21 — P1-21 — 15AB (VIDEO 1)
Y PB SYNC P504-27 — P1-27 — 18A — P5-20 (VIDEO 4)
EE MODE P510-22 — P400-22 (SYSCON & TC)
DRUM ON P510-23 — P400-23 (SYSCON & TC)
SERVO CF P510-27 — P400-27 (SYSCON & TC)
REF CF P504-29 — P1-29 — 23A (VIDEO 3)
FRAMING P504-28 — P1-28 — 24A (VIDEO 3)
IC39 <<H SW TIMING>>
ROT
H SW1
CLK
REC
DRUM ON
EE MODE
Y PB SYNC
HSW POS SW1
H. SW PULSE GEN
CONT BOX
IC16, 36, 40
INV BUFFER
TP20
TP19
NTSC
PAL
IC40, X2
OSC
IC27
BUFFER
Q10
IC23 <<CTL MOD SELECTION>>
FG1
FG2
X4
PULSE GEN
PB CTL
CF30IN
CF15IN
1/2
1/2
NTSC
PAL
PB OUT
D OUT 1
D OUT 2
CTL DUTY MODULATION
REC OUT
CLK
IC42
M. M. V.
IC11~13, 27~32 Q11, 12
CF SERVO CIRCUIT
PWM IN
PWM OUT
CAPLSD
2F
TAPE CF
CTL REC
D OUT
FRAMING
SERVO LOCK
CF ON/OFF SELECT & CF PHASE CONTROL
CF LOCK
CF MODE

SERVO BLOCK DIAGRAM (2/2)

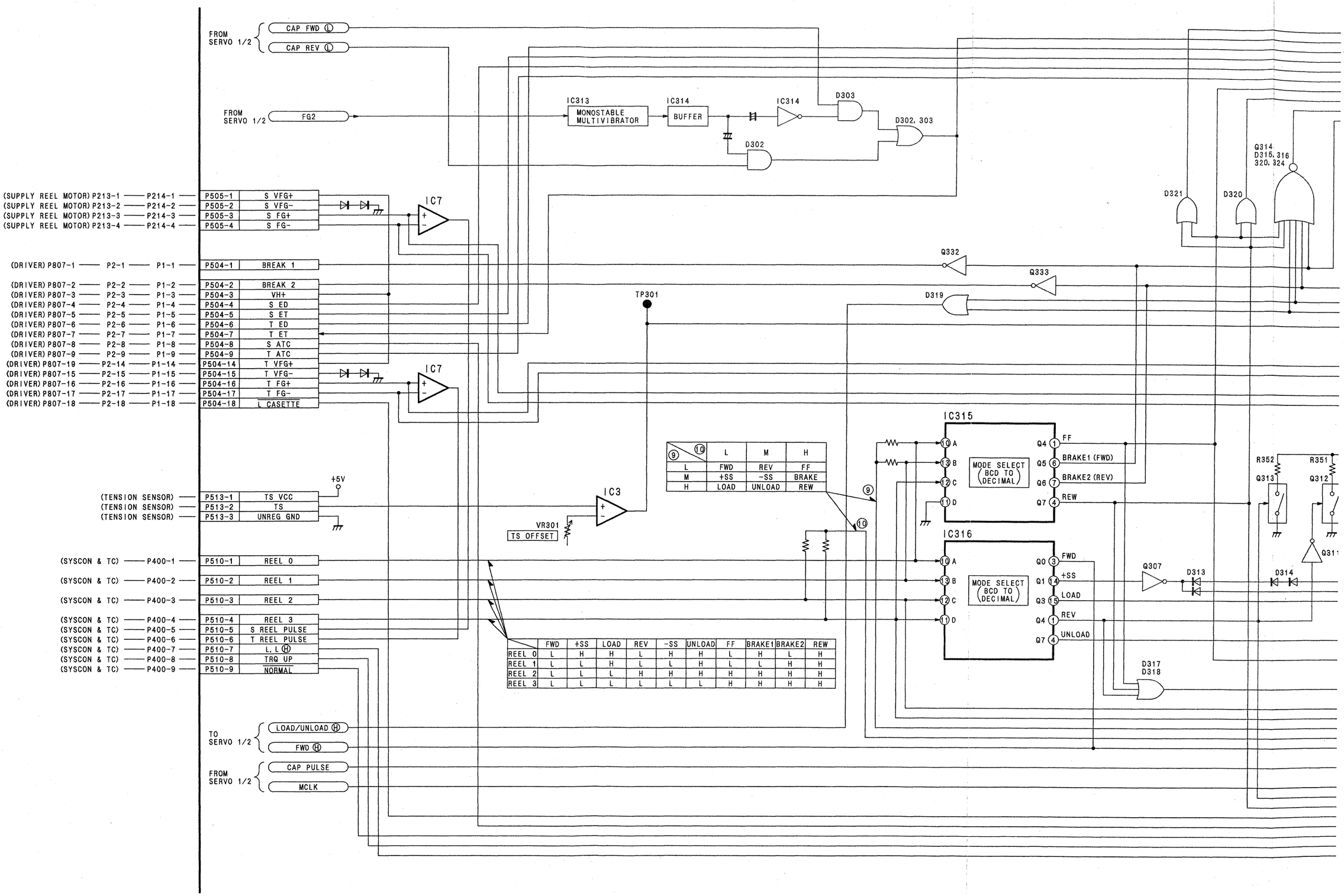

⑨ \ ⑩	L	M	H
L	FWD	REV	FF
M	+SS	-SS	BRAKE
H	LOAD	UNLOAD	REW

	FWD	+SS	LOAD	REV	-SS	UNLOAD	FF	BRAKE1	BRAKE2	REW
REEL 0	L	H	H	L	H	H	L	H	L	H
REEL 1	L	L	H	L	L	H	L	L	H	H
REEL 2	L	L	L	H	H	H	H	H	H	H
REEL 3	L	L	L	L	L	L	H	H	H	H

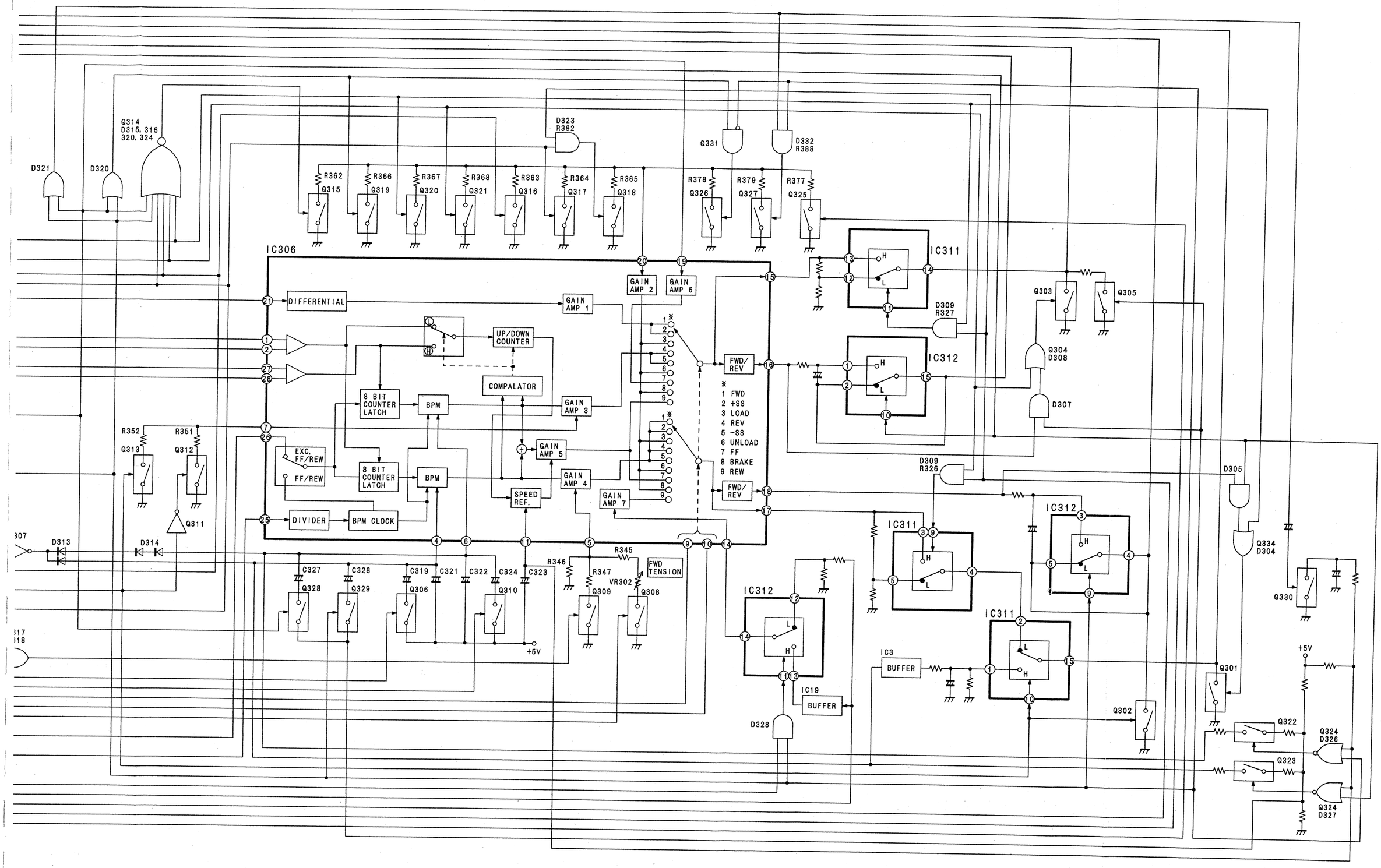
IC306
DIFFERENTIAL
GAIN AMP 1
GAIN AMP 2
GAIN AMP 3
GAIN AMP 4
GAIN AMP 5
GAIN AMP 6
GAIN AMP 7
UP/DOWN COUNTER
COMPALATOR
8 BIT COUNTER LATCH
BPM
EXC. FF/REW
FF/REW
DIVIDER
BPM CLOCK
SPEED REF.
FWD/REV
FWD TENSION
※
1 FWD
2 +SS
3 LOAD
4 REV
5 -SS
6 UNLOAD
7 FF
8 BRAKE
9 REW
IC311
IC312
IC3
BUFFER
IC19
BUFFER
+5V
D321
D320
Q314
D315, 316
320, 324
D323
R382
Q331
D332
R388
R362
Q315
R366
Q319
R367
Q320
R368
Q321
R363
Q316
R364
Q317
R365
Q318
R378
Q326
R379
Q327
R377
Q325
D309
R327
Q303
Q305
Q304
D308
D307
D309
R326
D305
Q334
D304
Q330
Q301
Q302
Q322
Q323
Q324
D326
Q324
D327
R352
Q313
R351
Q312
Q311
D313
D314
C327
Q328
C328
Q329
C319
Q306
C321
C322
C324
Q310
C323
R346
R347
Q309
R345
VR302
Q308
D328

BLK—19

FRONT/METER/METER SELECT BLOCK DIAGRAM

FRONT BLOCK DIAGRAM

METEF

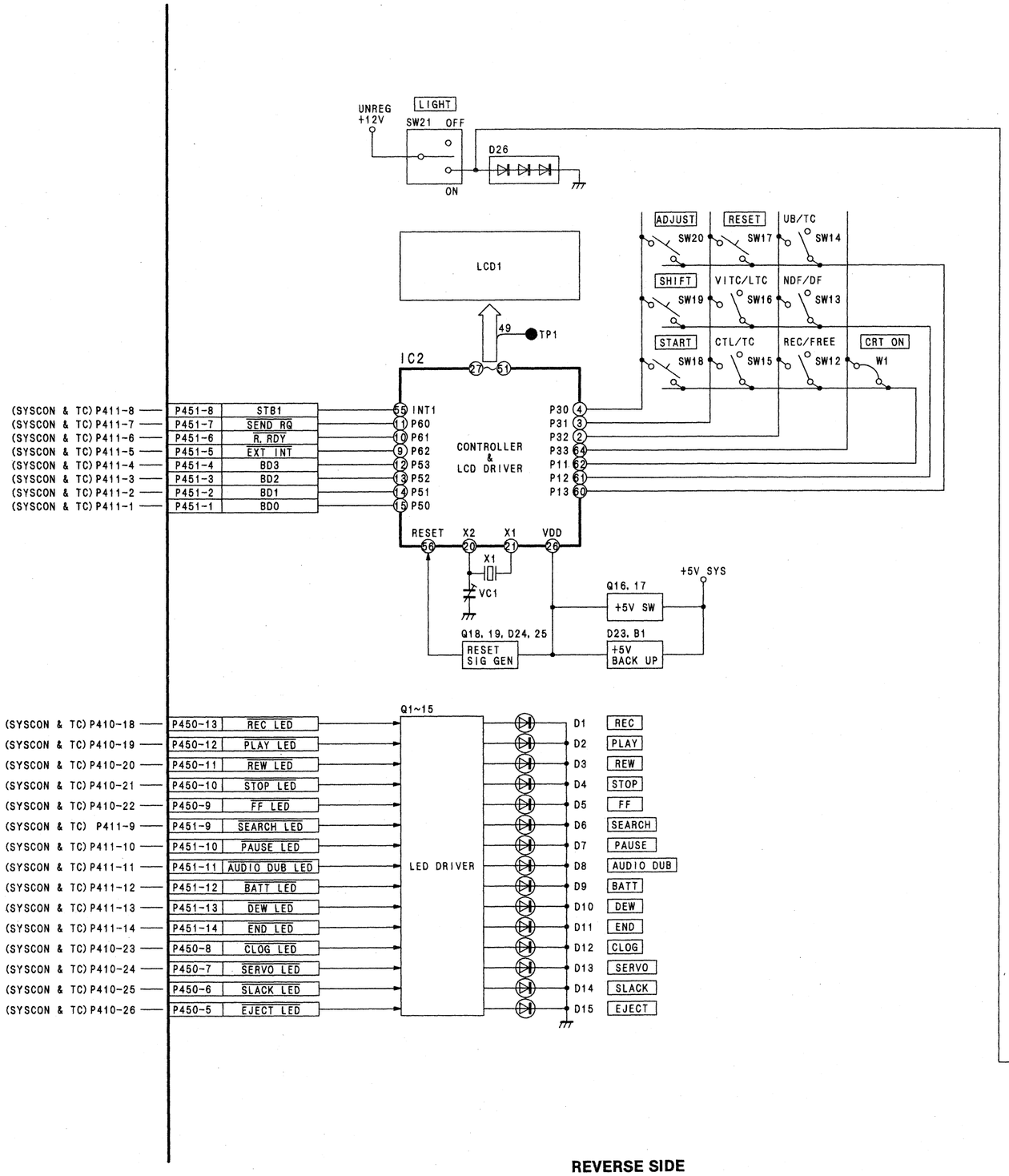

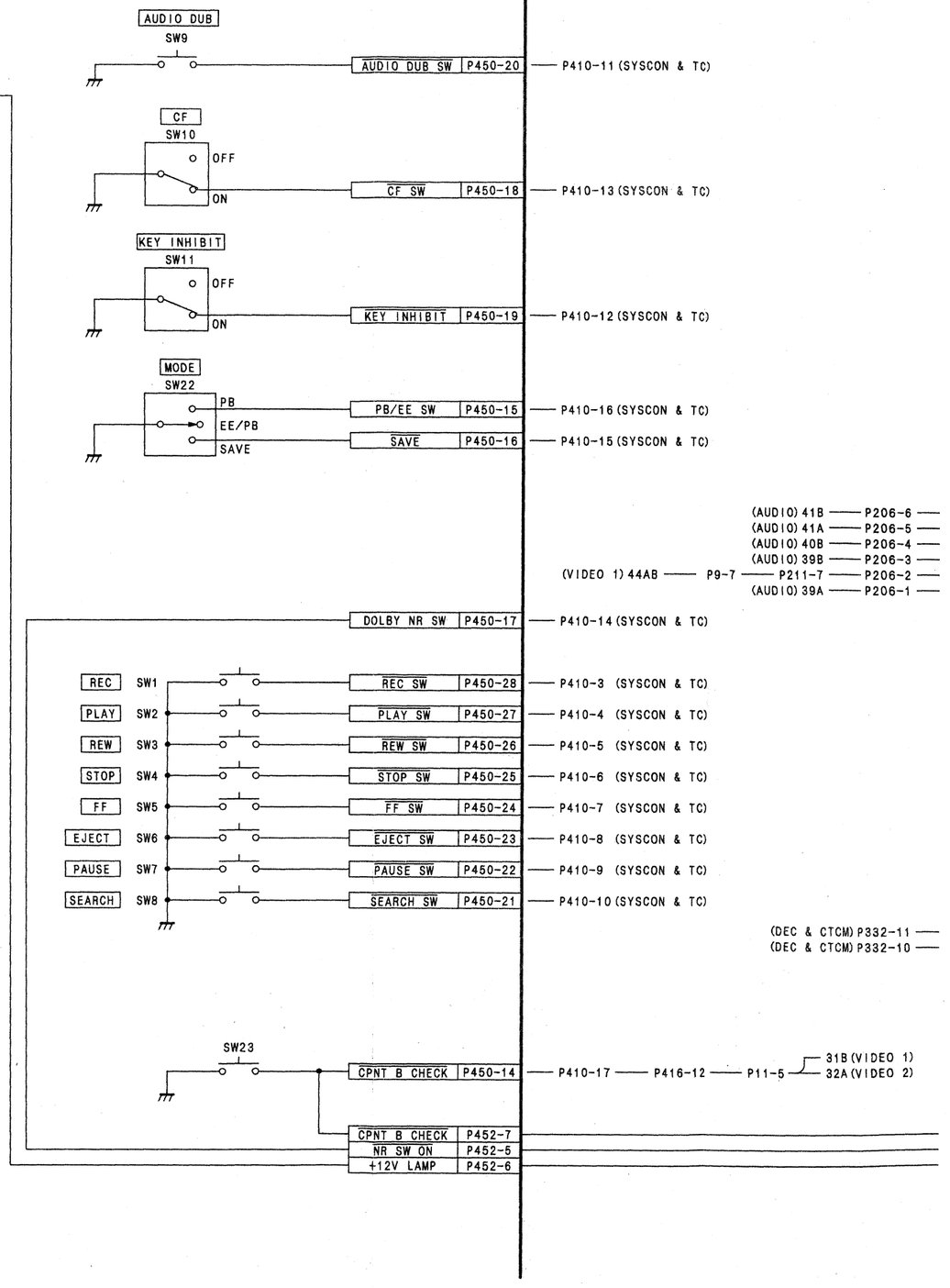

REVERSE SIDE

SERVO 2/2

METER BLOCK DIAGRAM

METER SELECT BLOCK DIAGRAM

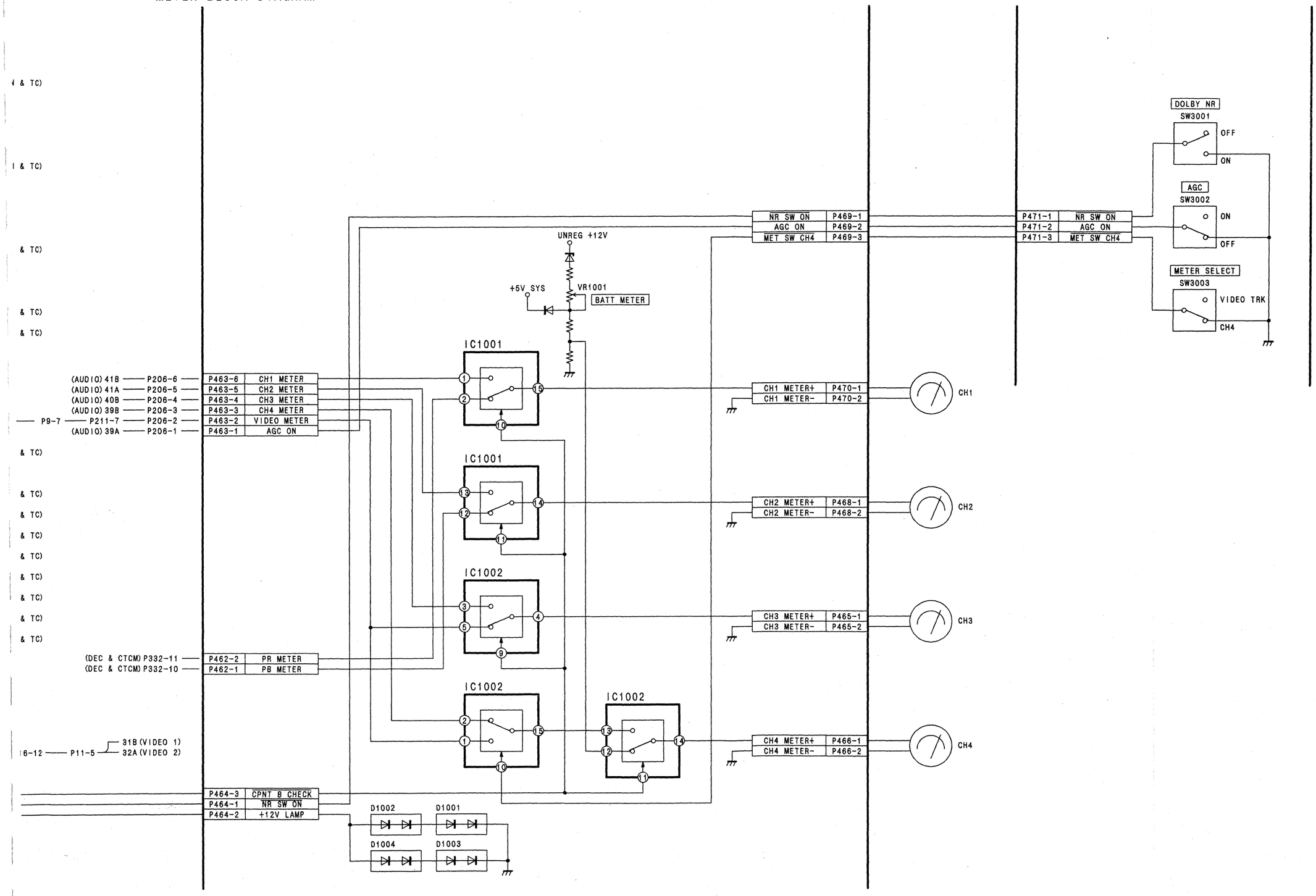

DRIVER BLOCK DIAGRAM

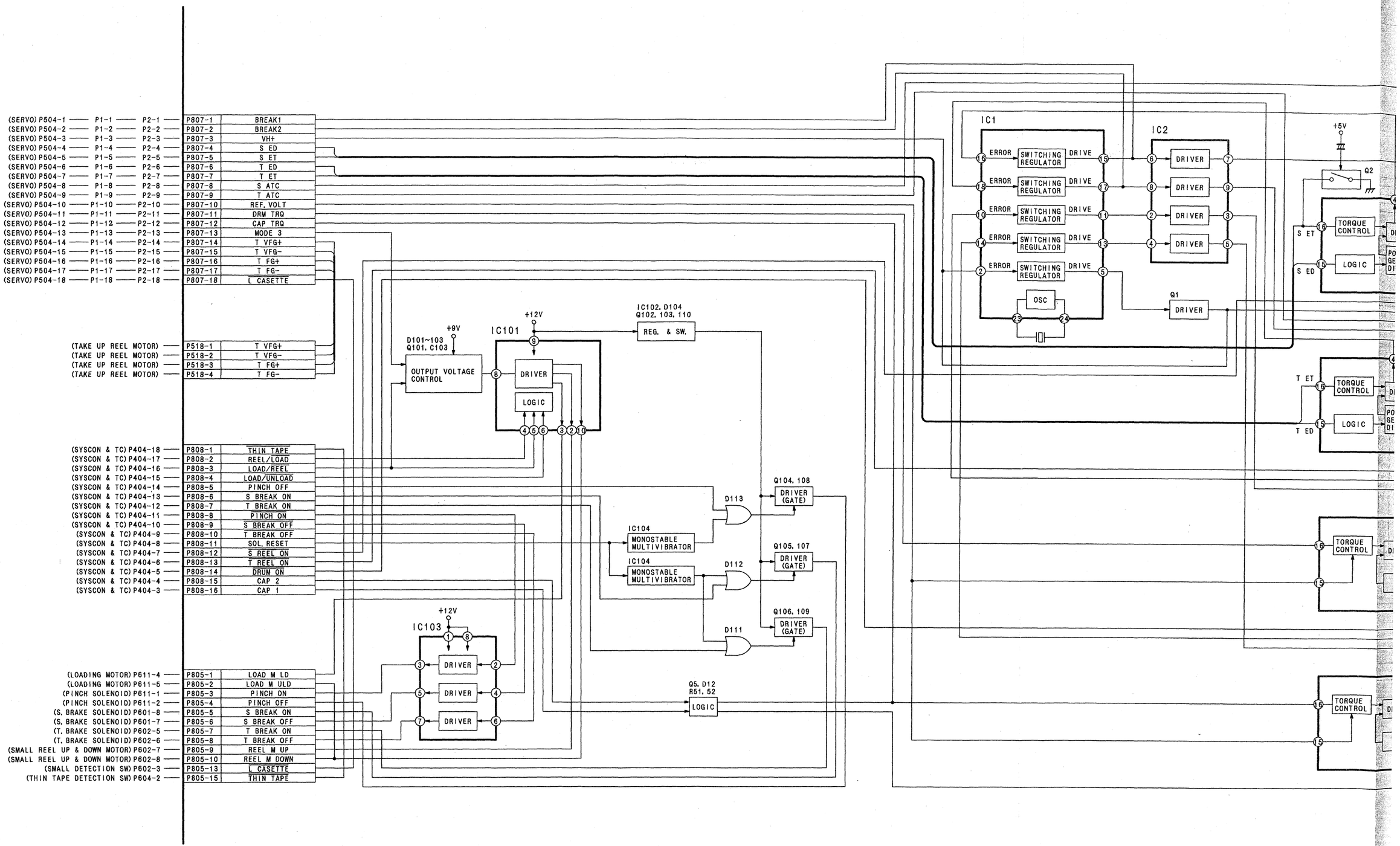

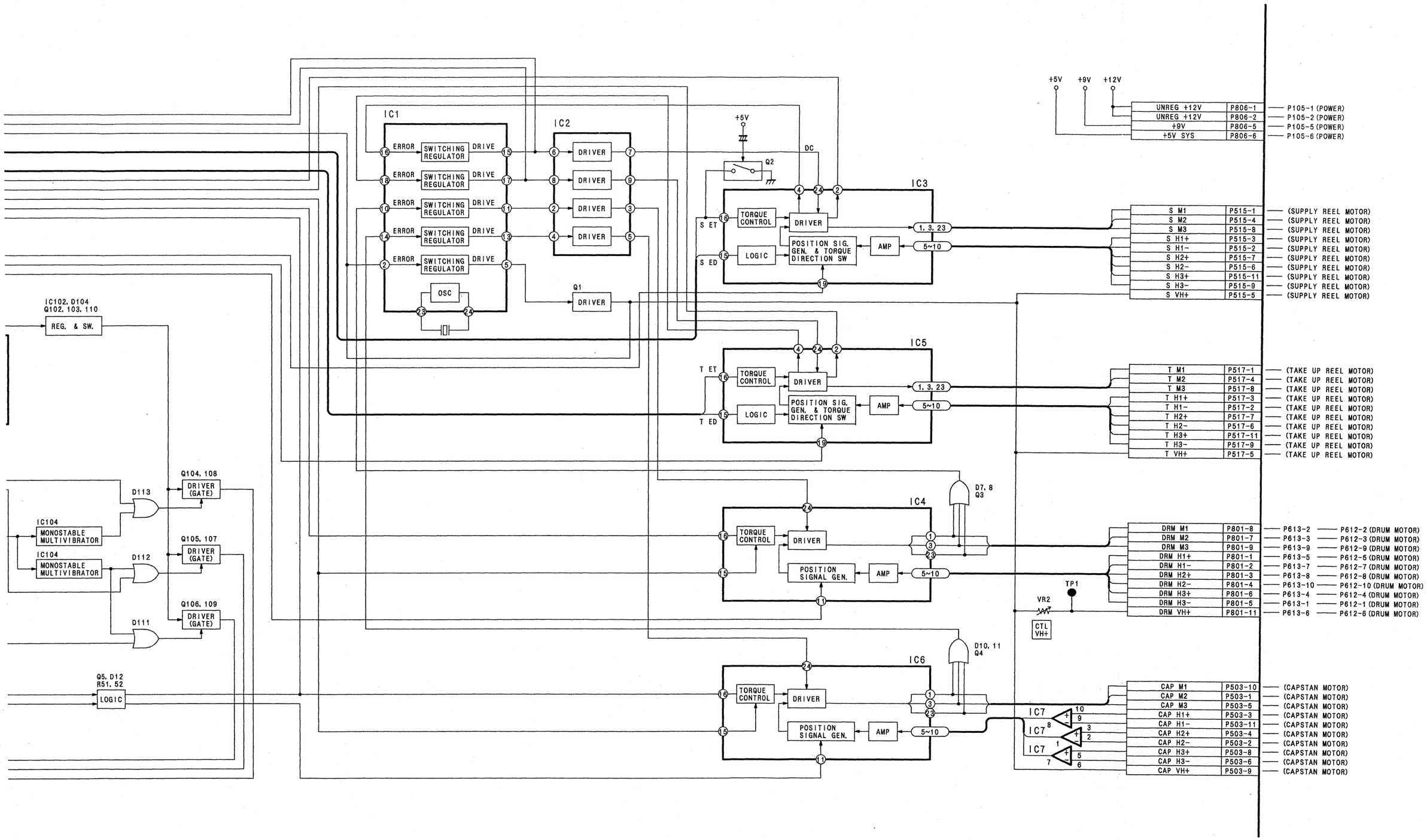

REVERSE SIDE

SYSTEM CONTROL & TC 1/3

SYSTEM CONTROL & TC BLOCK DIAGRAM (1/3)

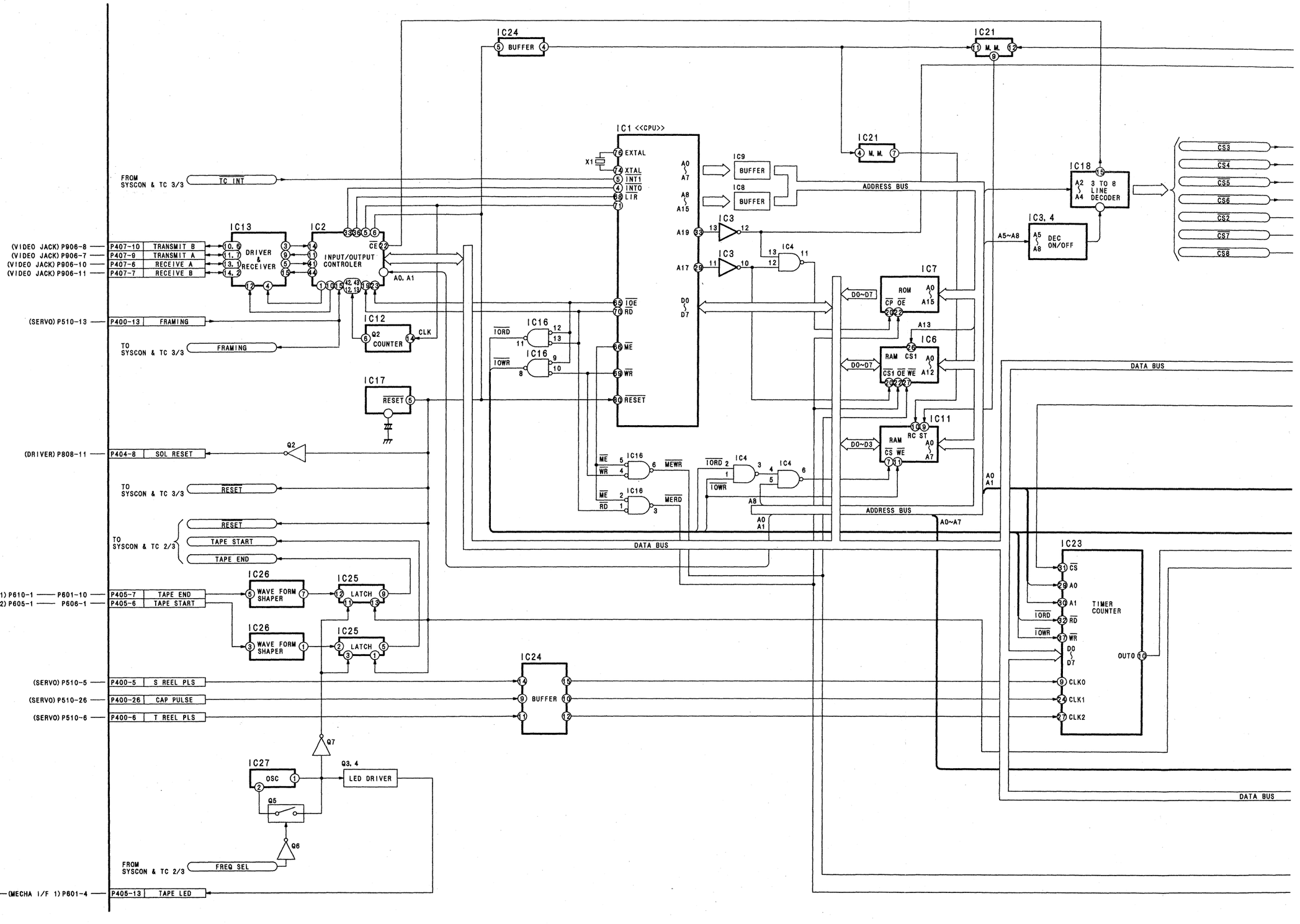

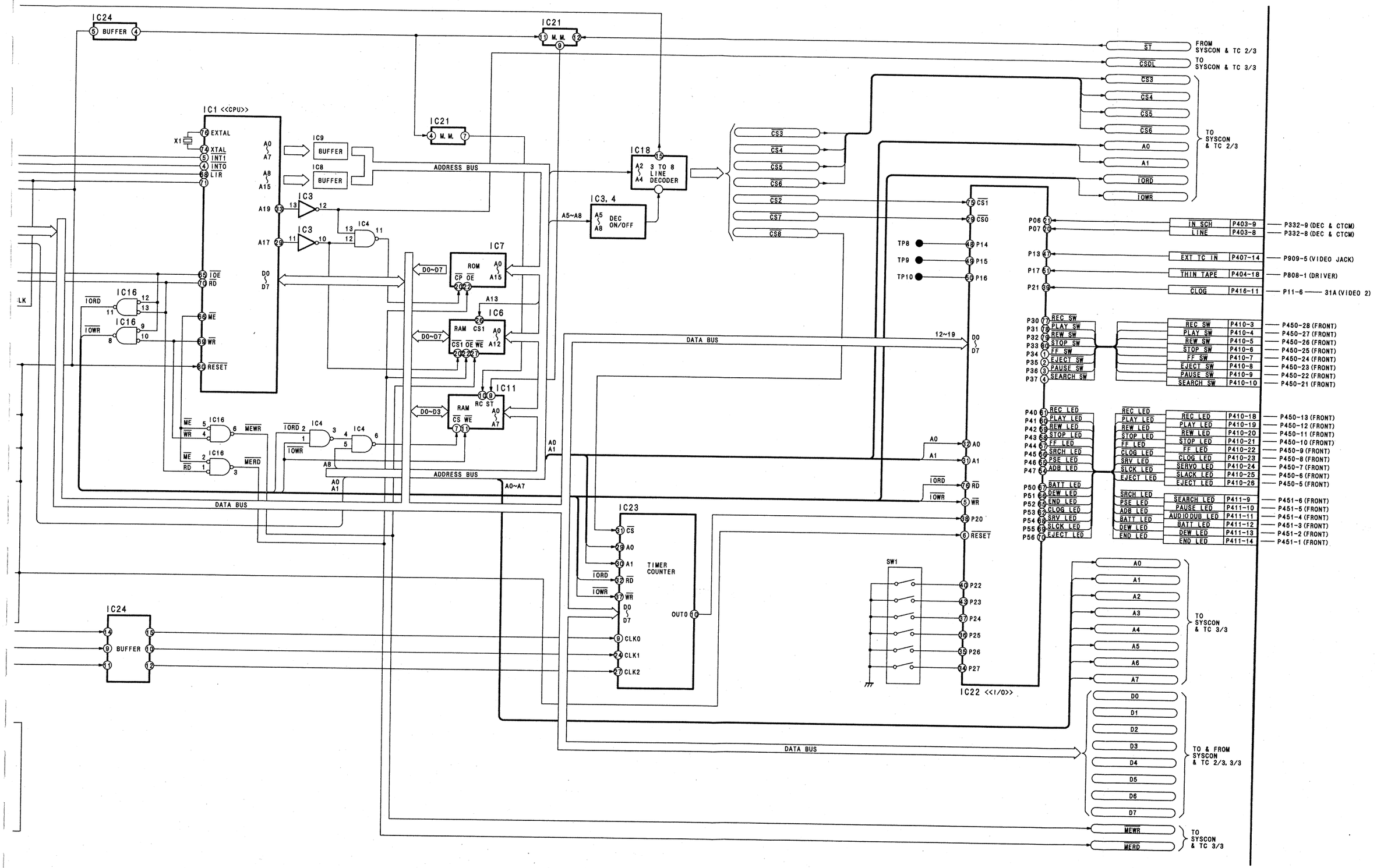
IC24
BUFFER
IC21
M. M.
IC1 <<CPU>>
EXTAL
XTAL
INT1
INT0
LIR
X1
IC9
BUFFER
IC8
BUFFER
ADDRESS BUS
IC3
IC4
IC21
M. M.
IC18
3 TO 8 LINE DECODER
IC3, 4
DEC ON/OFF
A5~A8
CS3
CS4
CS5
CS6
CS2
CS7
CS8
ST
CSDL
A0
A1
IORD
IOWR
FROM SYSCON & TC 2/3
TO SYSCON & TC 3/3
TO SYSCON & TC 2/3
IC7
ROM
IC6
RAM
IC11
RAM
RC ST
DO~D7
DO~D3
A13
IC16
IC4
IOE
RD
ME
WR
RESET
MEWR
MERD
DATA BUS
A0~A7
TP8
TP9
TP10
P14
P15
P16
12~19
P06
P07
P13
P17
P21
IN SCH
LINE
EXT TC IN
THIN TAPE
CLOG
P403-9
P403-8
P407-14
P404-18
P416-11
P332-9 (DEC & CTCM)
P332-8 (DEC & CTCM)
P909-5 (VIDEO JACK)
P808-1 (DRIVER)
P11-6
31A (VIDEO 2)
REC SW
PLAY SW
REW SW
STOP SW
FF SW
EJECT SW
PAUSE SW
SEARCH SW
P410-3
P410-4
P410-5
P410-6
P410-7
P410-8
P410-9
P410-10
P450-28 (FRONT)
P450-27 (FRONT)
P450-26 (FRONT)
P450-25 (FRONT)
P450-24 (FRONT)
P450-23 (FRONT)
P450-22 (FRONT)
P450-21 (FRONT)
REC LED
PLAY LED
REW LED
STOP LED
FF LED
SRCH LED
PSE LED
ADB LED
BATT LED
DEW LED
END LED
CLOG LED
SRV LED
SLCK LED
EJECT LED
SEARCH LED
PAUSE LED
AUDIODUB LED
SLACK LED
P410-18
P410-19
P410-20
P410-21
P410-22
P410-23
P410-24
P410-25
P410-26
P411-9
P411-10
P411-11
P411-12
P411-13
P411-14
P450-13 (FRONT)
P450-12 (FRONT)
P450-11 (FRONT)
P450-10 (FRONT)
P450-9 (FRONT)
P450-8 (FRONT)
P450-7 (FRONT)
P450-6 (FRONT)
P450-5 (FRONT)
P451-6 (FRONT)
P451-5 (FRONT)
P451-4 (FRONT)
P451-3 (FRONT)
P451-2 (FRONT)
P451-1 (FRONT)
IC23
TIMER COUNTER
CS
A0
A1
RD
WR
DO
D7
CLK0
CLK1
CLK2
OUT0
SW1
P22
P23
P24
P25
P26
P27
IC22 <<I/O>>
TO SYSCON & TC 3/3
TO & FROM SYSCON & TC 2/3, 3/3
TO SYSCON & TC 3/3

BLK—22

SYSTEM CONTROL & TC BLOCK DIAGRAM (2/3)

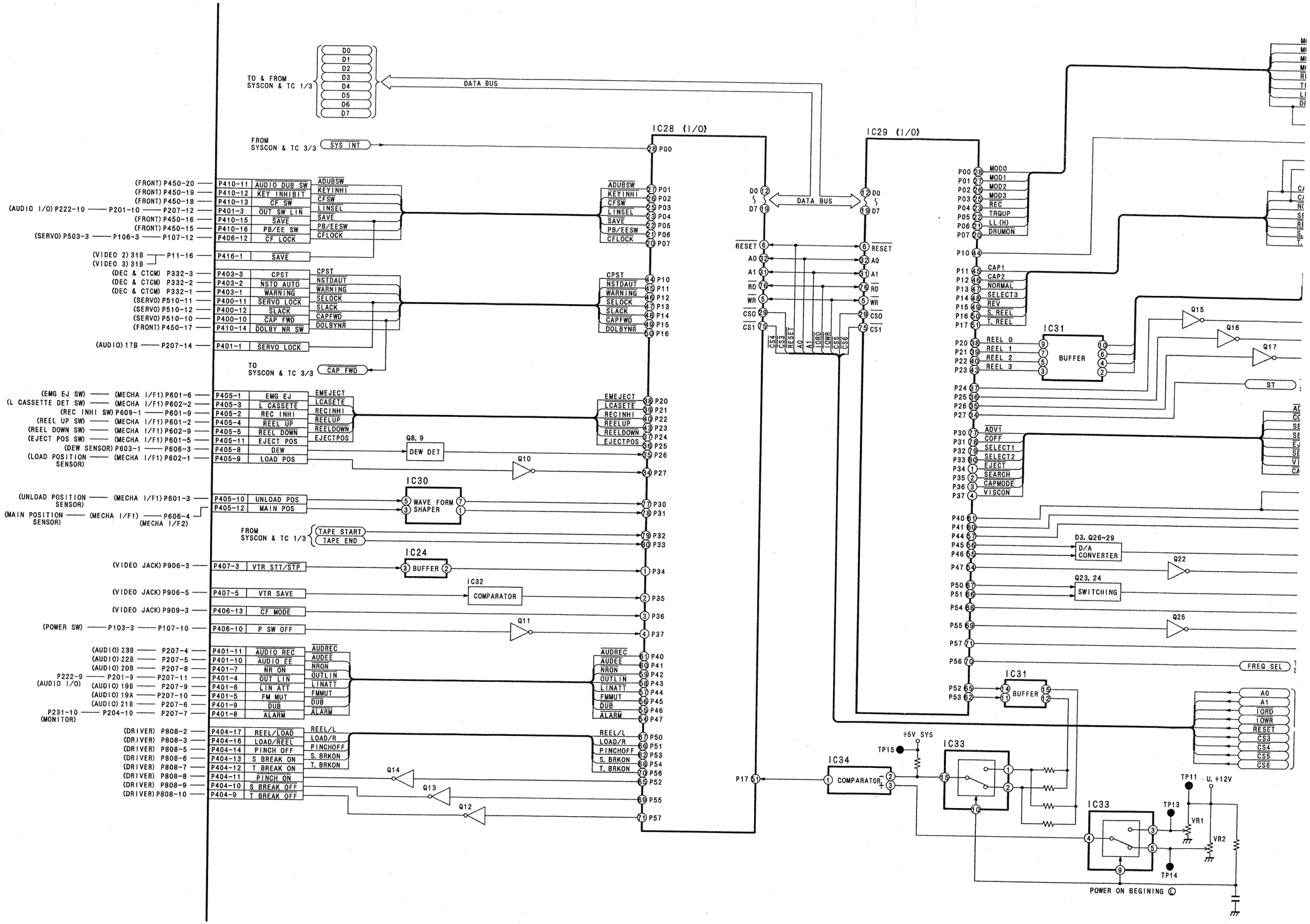

CK DIAGRAM (2/3)

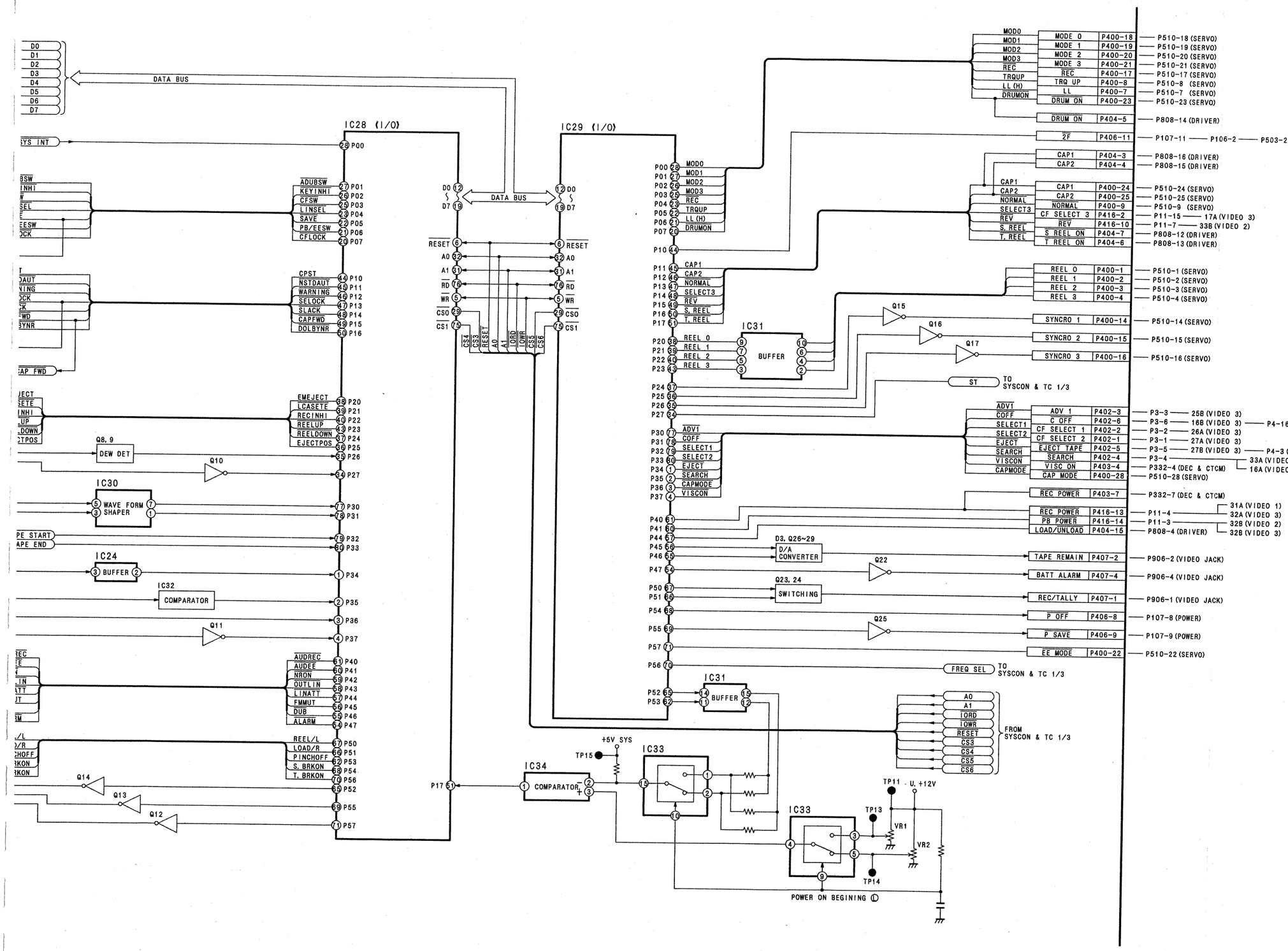

SYSTEM CONTROL & TC BLOCK DIAGRAM (3/3)

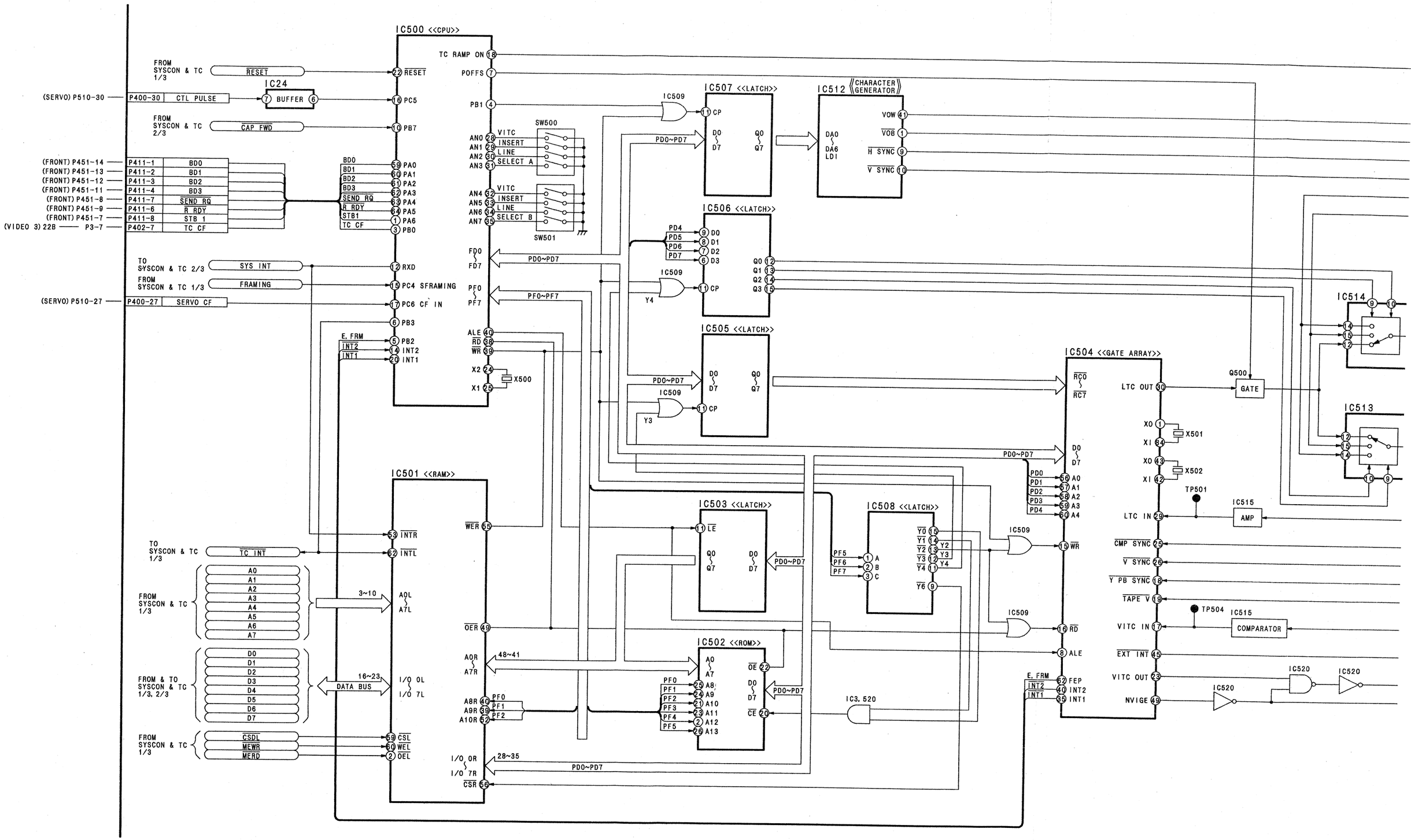

BLK—24

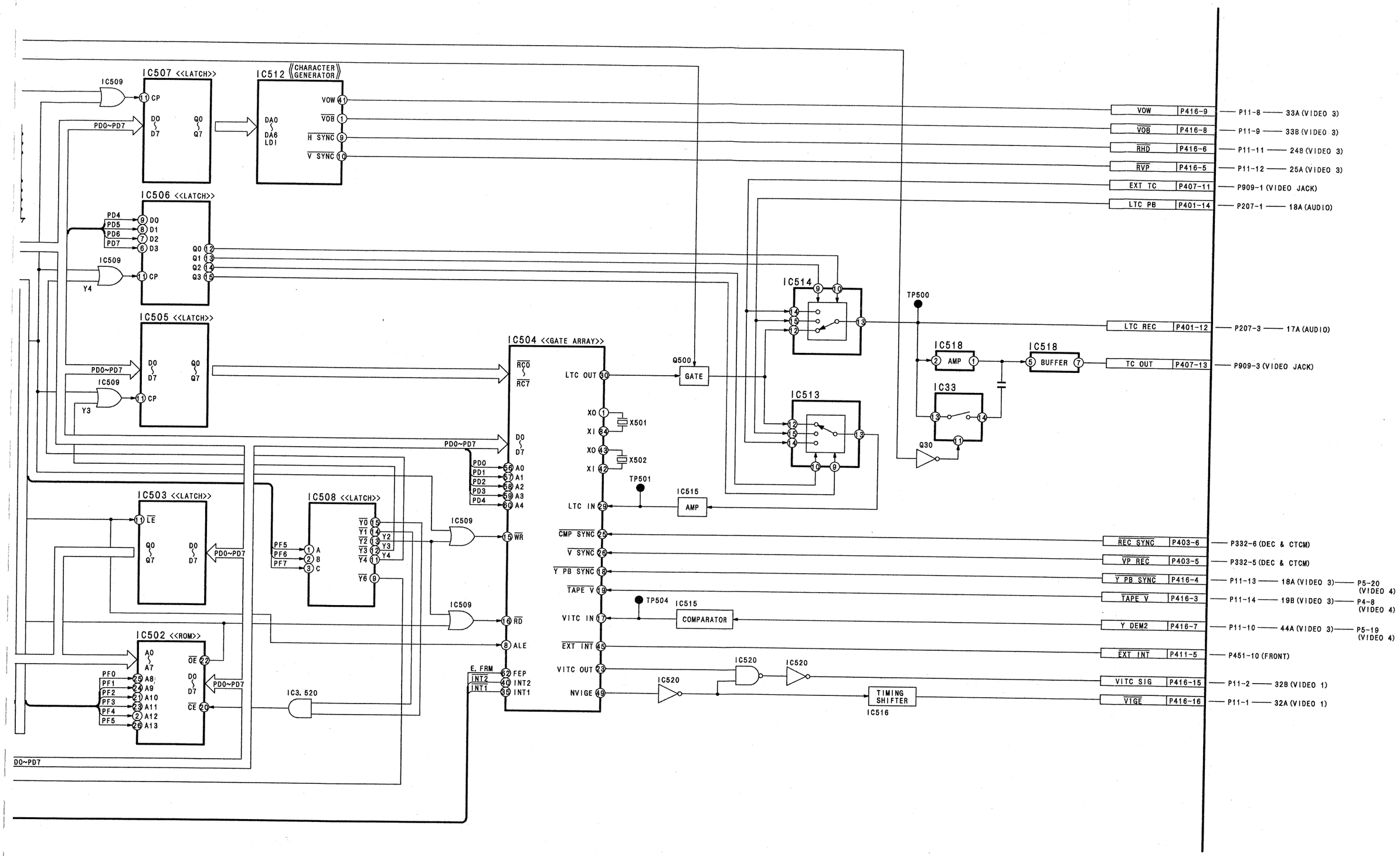
IC507 <<LATCH>>
IC512 CHARACTER GENERATOR
IC506 <<LATCH>>
IC505 <<LATCH>>
IC504 <<GATE ARRAY>>
IC503 <<LATCH>>
IC508 <<LATCH>>
IC502 <<ROM>>
IC514
IC513
IC518 AMP
IC518 BUFFER
IC33
IC515 AMP
IC515 COMPARATOR
IC520
IC3, 520
IC509
Q500 GATE
Q30
TP500
TP501
TP504
TIMING SHIFTER IC516
VOW P416-9 — P11-8 — 33A (VIDEO 3)
VOB P416-8 — P11-9 — 33B (VIDEO 3)
RHD P416-6 — P11-11 — 24B (VIDEO 3)
RVP P416-5 — P11-12 — 25A (VIDEO 3)
EXT TC P407-11 — P909-1 (VIDEO JACK)
LTC PB P401-14 — P207-1 — 18A (AUDIO)
LTC REC P401-12 — P207-3 — 17A (AUDIO)
TC OUT P407-13 — P909-3 (VIDEO JACK)
REC SYNC P403-6 — P332-6 (DEC & CTCM)
VP REC P403-5 — P332-5 (DEC & CTCM)
Y PB SYNC P416-4 — P11-13 — 18A (VIDEO 3) — P5-20 (VIDEO 4)
TAPE V P416-3 — P11-14 — 19B (VIDEO 3) — P4-8 (VIDEO 4)
Y DEM2 P416-7 — P11-10 — 44A (VIDEO 3) — P5-19 (VIDEO 4)
EXT INT P411-5 — P451-10 (FRONT)
VITC SIG P416-15 — P11-2 — 32B (VIDEO 1)
VIGE P416-16 — P11-1 — 32A (VIDEO 1)
PD0~PD7
D0~PD7

POWER SUPPLY BLOCK DIAGRAM

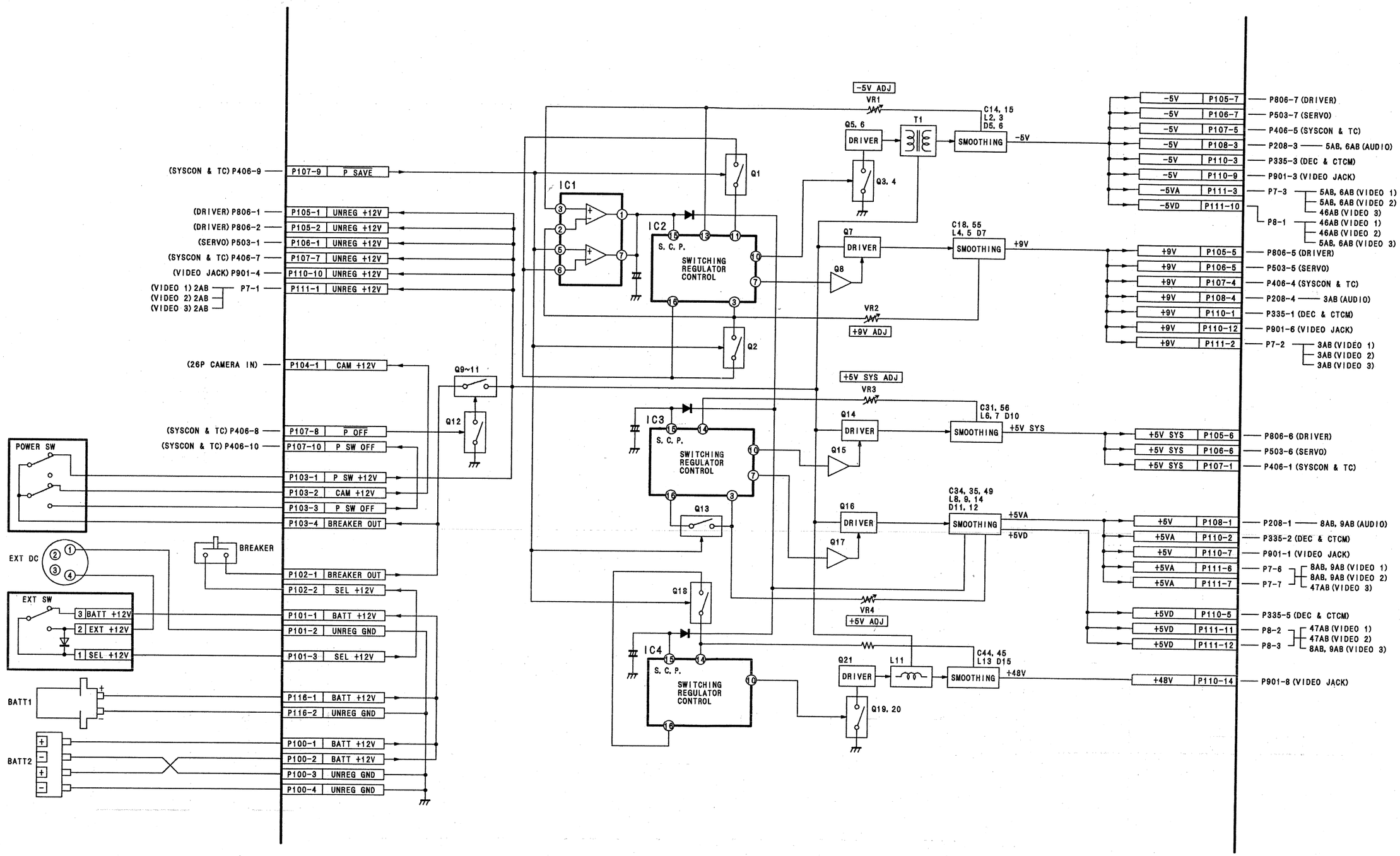

BLK—25

INTERCONNECTION SCHEMATIC DIAGRAM (1/2)

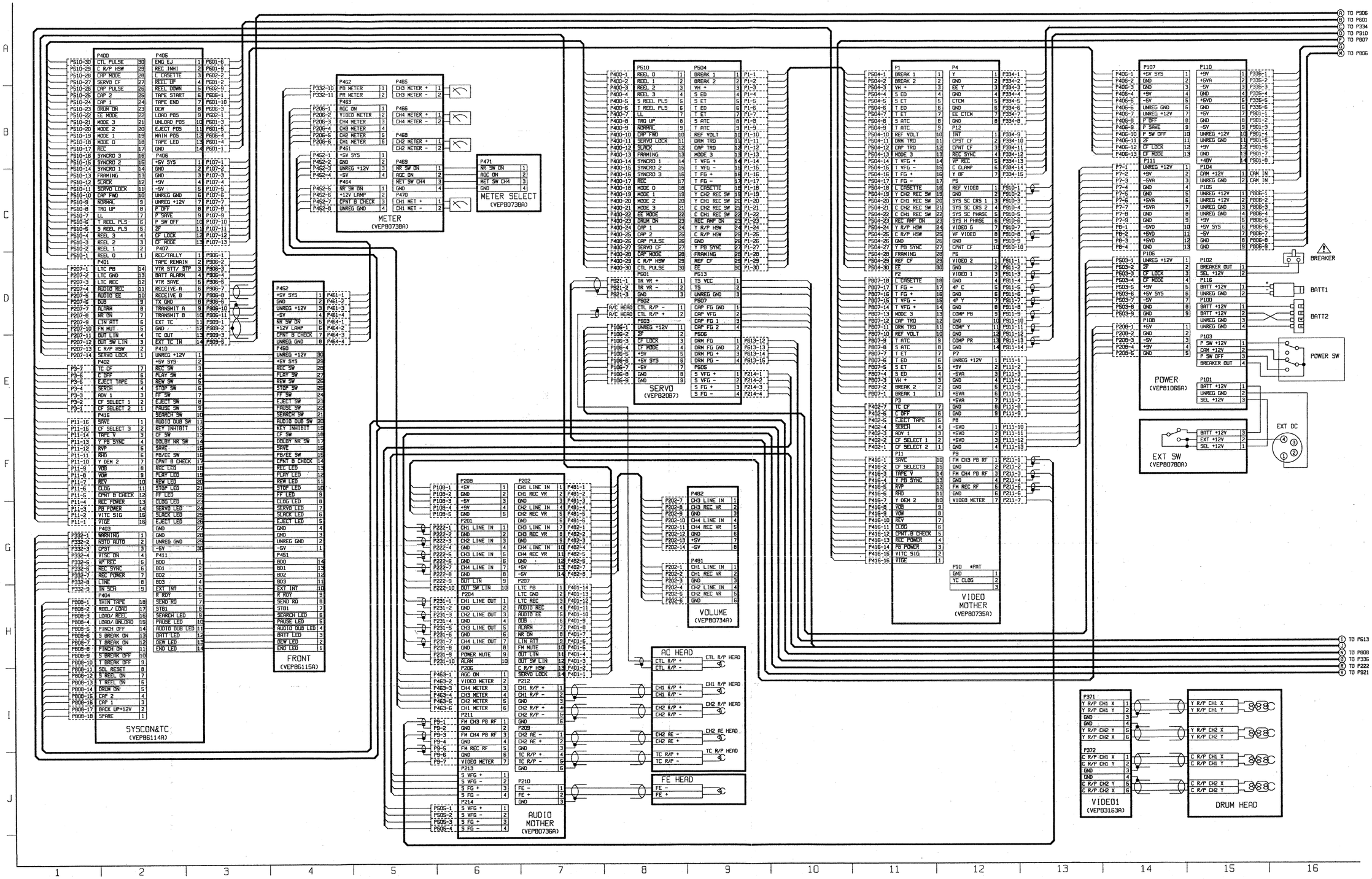

REVERSE SIDE

POWER SUPPLY

SCM—1

SCM—1

INTERCONNECTION SCHEMATIC DIAGRAM (2/2)

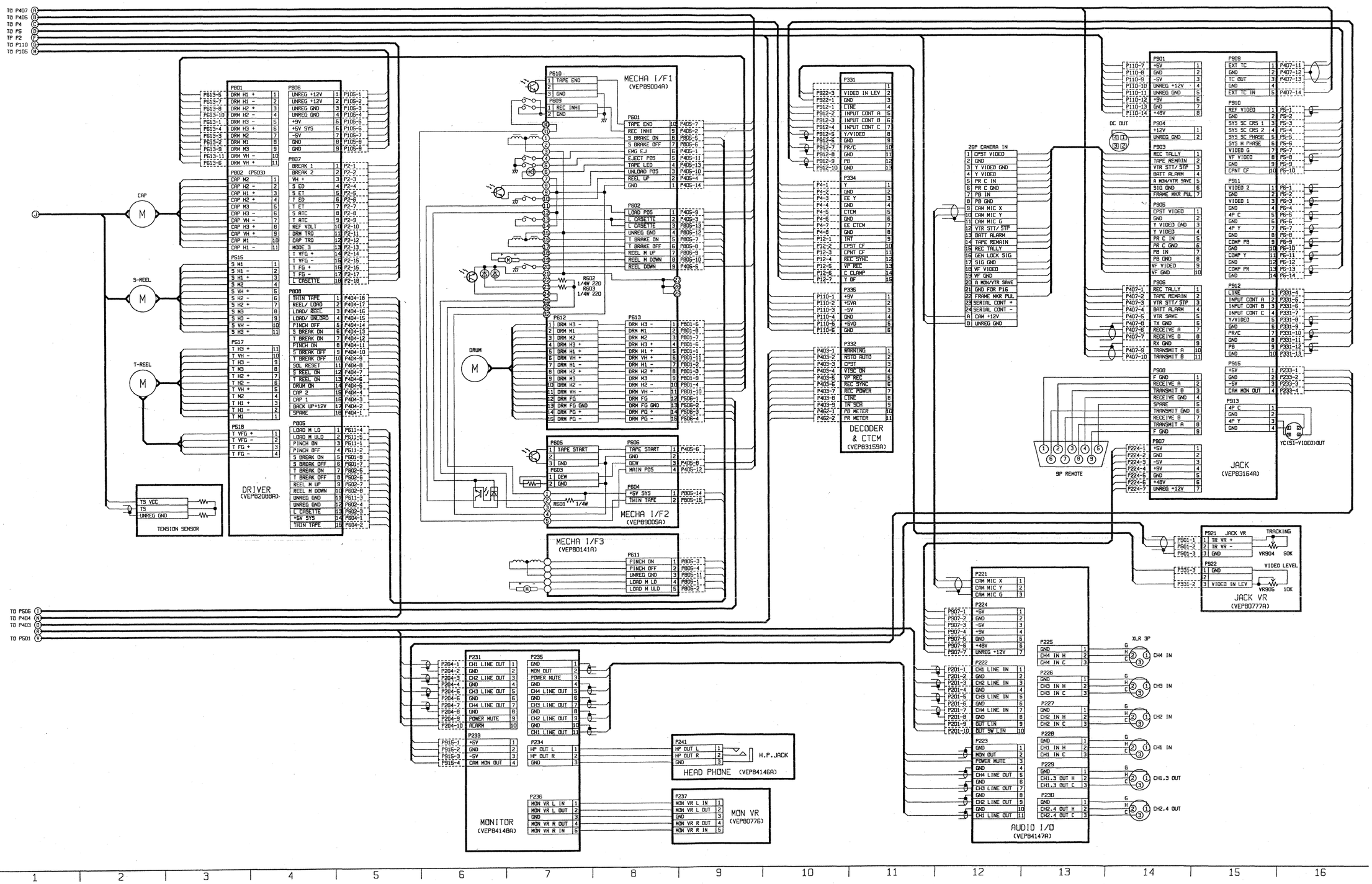

SCM—2

SCM—2

DECODER & CTCM SCHEMATIC DIAGRAM (1/4)

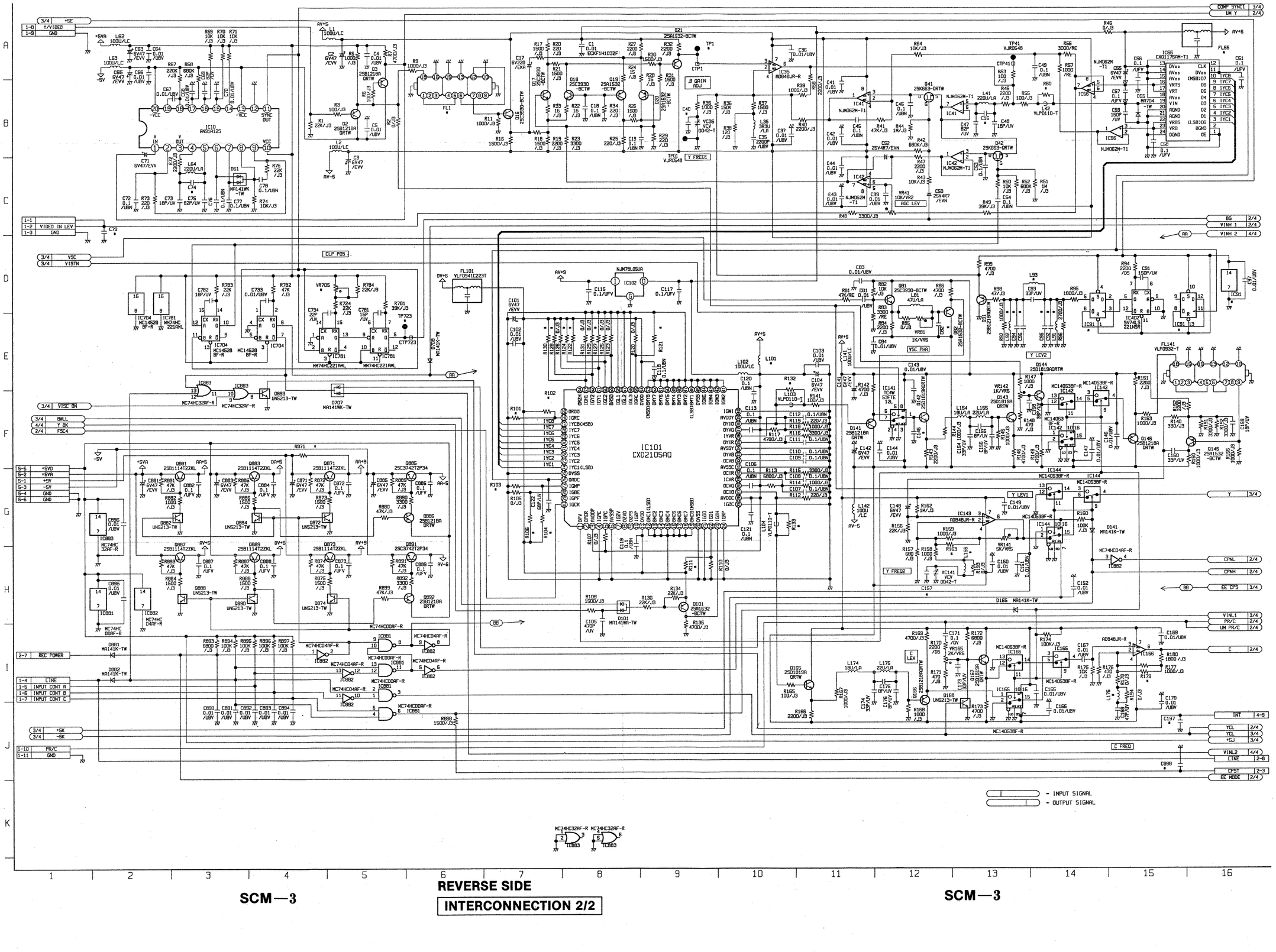

REVERSE SIDE

INTERCONNECTION 2/2

DECODER & CTCM SCHEMATIC DIAGRAM (2/4)

COMPARISON CHART OF NTSC MODEL AND PAL MODEL (FOR 1/4 DIAGRAM)

REF	NTSC	PAL
C145	*PAT/UV	*PAT/UV
C157	*PAT/UV	*PAT/UV
C16	*PAT/UV	*PAT/UV
C197	*PAT/UBV	*PAT/UBV
C40	*PAT/UV	*PAT/UV
C74	*PAT/UV	*PAT/UV
C82	82P/UV	33P/UV
C79	*PAT/UBV	*PAT/UBV
C898	*PAT/UBV	*PAT/UBV
C92	120P/UV	180P/UV
C94	120P/UV	180P/UV
C95	120P/UV	*PAT/UV
C96	120P/UV	*PAT/UV
FL55	*PAT	*PAT
L101	*PAT/LC	*PAT/LC
L156	*PAT/LA	*PAT/LA
L176	*PAT/LA	*PAT/LA
L91	3R3U/LA	2R7U/LA
L92	3R3U/LA	2R7U/LA
L93	220U/LA	150U/LA
FL1	VLF1015-T	VLF0932-T
R101	0/J3	*PAT/J3
R102	*PAT/J3	0/J3
R103	0/J3	*PAT/J3
R104	*PAT/J3	0/J3
R106	*PAT/J3	*PAT/J3
R111	*PAT/J3	*PAT/J3
R121	*PAT/J3	*PAT/J3
R122	*PAT/J3	*PAT/J3
R124	*PAT/J3	*PAT/J3
R127	*PAT/J3	*PAT/J3
R128	*PAT/J3	*PAT/J3
R130	*PAT/J3	*PAT/J3
R132	*PAT/J3	*PAT/J3
R133	*PAT/J3	*PAT/J3
R163	*PAT/J6	*PAT/J6
R179	*PAT/J6	*PAT/J6
R60	*PAT/J3	*PAT/J3
R871	*PAT/J3	*PAT/J3
TP1	*PAT	*PAT
TP723	*PAT	*PAT
VR705	*PAT/VR5	*PAT/VR5

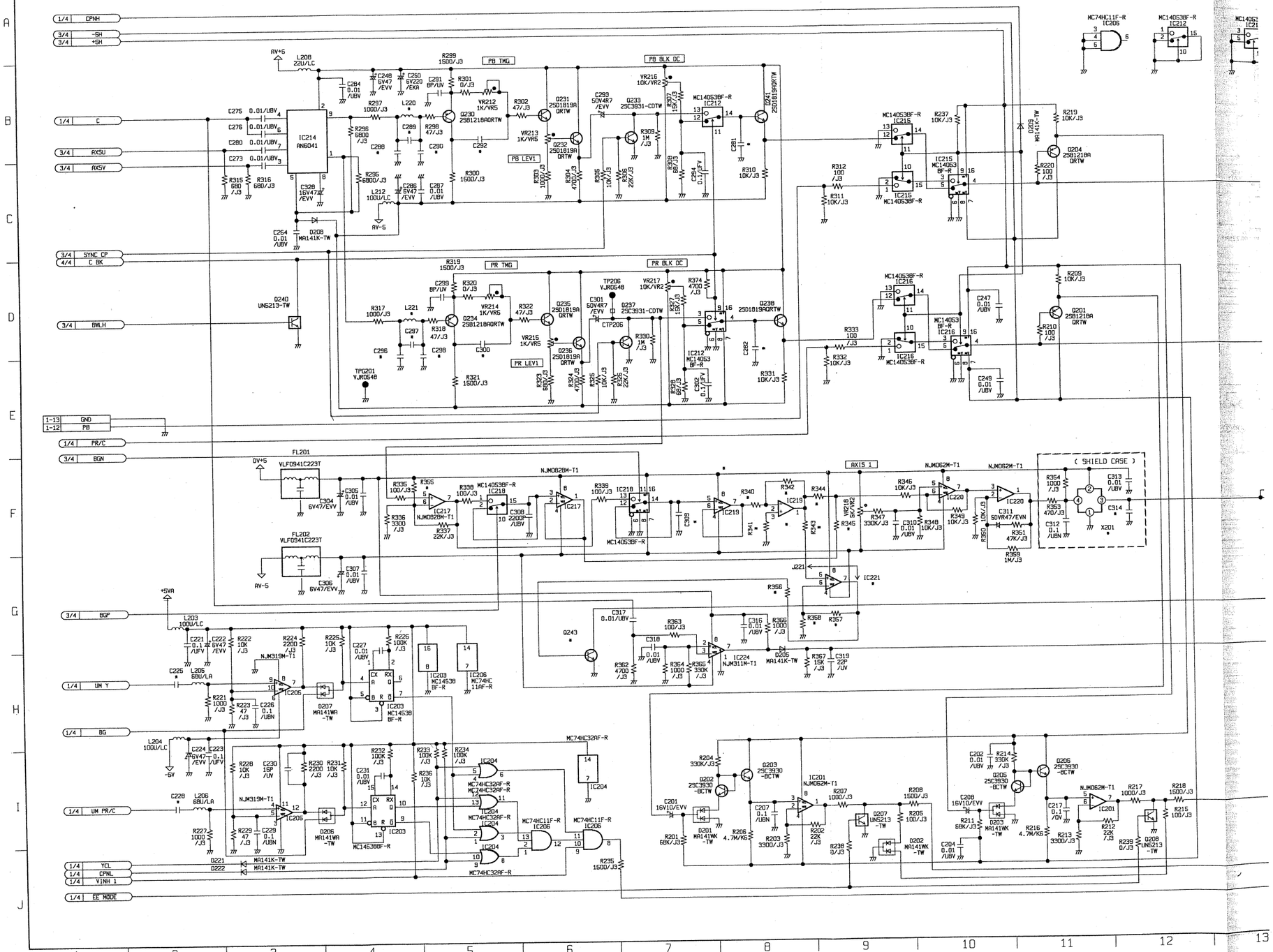

SCHEMATIC DIAGRAM (2/4)

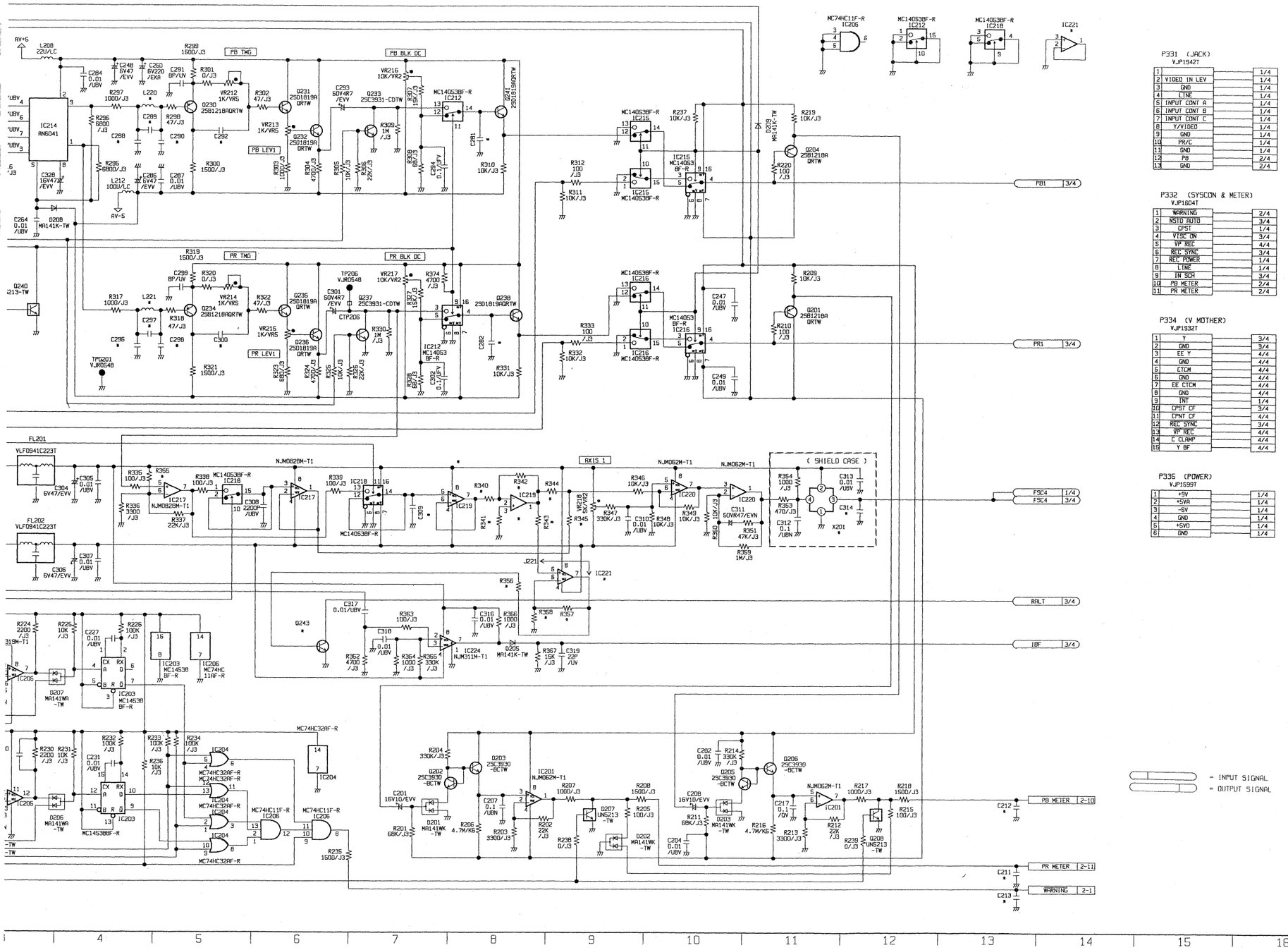

P331 (JACK)
VJP1542T

1		1/4
2	VIDEO IN LEV	1/4
3	GND	1/4
4	LINE	1/4
5	INPUT CONT A	1/4
6	INPUT CONT B	1/4
7	INPUT CONT C	1/4
8	Y/VIDEO	1/4
9	GND	1/4
10	PR/C	1/4
11	GND	1/4
12	PB	2/4
13	GND	2/4

P332 (SYSCON & METER)
VJP1604T

1	WARNING	2/4
2	NSTD AUTO	3/4
3	CPST	1/4
4	VISC ON	3/4
5	VP REC	4/4
6	REC SYNC	3/4
7	REC POWER	1/4
8	LINE	1/4
9	IN SCH	3/4
10	PB METER	2/4
11	PR METER	2/4

P334 (V MOTHER)
VJP1932T

1	Y	3/4
2	GND	3/4
3	EE Y	4/4
4	GND	4/4
5	CTCM	4/4
6	GND	4/4
7	EE CTCM	4/4
8	GND	4/4
9	INT	1/4
10	CPST CF	3/4
11	CPNT CF	4/4
12	REC SYNC	3/4
13	VP REC	4/4
14	C CLAMP	4/4
15	Y BF	4/4

P335 (POWER)
VJP1599T

1	+5V	1/4
2	+5VA	1/4
3	-5V	1/4
4	GND	1/4
5	+5VD	1/4
6	GND	1/4

COMPARISON CHART OF NTSC MODEL AND PAL MODEL (FOR 2/4 DIAGRAM)

REF	NTSC	PAL
C211	*PAT/UBV	*PAT/UBV
C212	*PAT/UBV	*PAT/UBV
C213	*PAT/UBV	*PAT/UBV
C225	27P/UV	22P/UV
C228	27P/UV	22P/UV
C281	*PAT/UV	*PAT/UV
C282	*PAT/UV	*PAT/UV
C288	22P/UV	18P/UV
C289	6P/UV	4P/UV
C290	82P/UV	68P/UV
C292	47P/UV	68P/UV
C296	22P/UV	18P/UV
C297	6P/UV	4P/UV
C298	82P/UV	68P/UV
C300	47P/UV	68P/UV
C309	*PAT/UBV	2200P/UBV
C314	*PAT/UV	*PAT/UV
IC219	*PAT	NJM062M-T1
IC221	*PAT	*PAT
L220	68U/LA	56U/LA
L221	68U/LA	56U/LA
Q243	*PAT	2SD1819AQRTW
R340	*PAT/J3	4700/J3
R341	*PAT/J3	3300/J3
R342	*PAT/J3	10K/J3
R343	*PAT/J3	10K/J3
R344	*PAT/J3	10K/J3
R345	0/J3	4700/J3
R355	1M/J3	*PAT/J3
R356	*PAT/J3	10K/J3
R357	*PAT/J3	*PAT/J3
R358	*PAT/J3	*PAT/J3
X201	VSX0338	VSX0270

REVERSE SIDE
DECODER & CTCM 3/4

DECODER & CTCM SCHEMATIC DIAGRAM (3/4)

COMPARISON CHART OF NTSC MODEL AND PAL MODEL (FOR 3/4 DIAGRAM)

REF	NTSC	PAL
C407	56P/UV	*PAT/UV
C413	39P/UV	12P/UV
C414	*PAT/UBV	*PAT/UBV
C416	*PAT/USV	*PAT/USV
C417	*PAT/UBV	*PAT/UBV
C418	*PAT/UBV	*PAT/UBV
C421	33P/UV	27P/UV
C505	6P/UV	12P/UV
C514	*PAT/USV	*PAT/USV
C515	*PAT/USV	*PAT/USV
C533	68P/UV	33P/UV
C534	68P/UV	33P/UV
C544	*PAT/UV	*PAT/UV
R403	2200/J3	1000/J3
R407	0/J3	*PAT/J3
R408	0/J3	*PAT/J3
R409	*PAT/J3	*PAT/J3
R410	*PAT/J3	*PAT/J3
R411	*PAT/J3	0/J3
R414	*PAT/J3	0/J3
R415	0/J3	*PAT/J3
R423	*PAT/J3	*PAT/J3
R424	*PAT/J3	*PAT/J3
R425	*PAT/J3	*PAT/J3
R435	*PAT/J3	*PAT/J3
R436	220K/J3	*PAT/J3
R455	*PAT/J3	*PAT/J3
R456	*PAT/J3	*PAT/J3
R457	*PAT/J3	*PAT/J3
R516	1500/J3	2200/J3
R517	*PAT/J3	*PAT/J3
R518	*PAT/J3	68K/J3
R535	2200	4700
R538	1800/J3	2200/J3
R539	*PAT/J3	*PAT/J3
R540	22K/J3	68K/J3
R541	100K/J3	150K/J3
R850	*PAT/J3	*PAT/J3
R851	*PAT/J3	*PAT/J3
R852	*PAT/J3	*PAT/J3
R853	*PAT/J3	*PAT/J3
R854	*PAT/J3	*PAT/J3
R855	*PAT/J3	*PAT/J3
R856	*PAT/J3	*PAT/J3
R857	*PAT/J3	*PAT/J3
R858	*PAT/J3	*PAT/J3
R859	*PAT/J3	*PAT/J3
TP432	*PAT	*PAT

R535
N=VRE006608222
P=VRE006606472

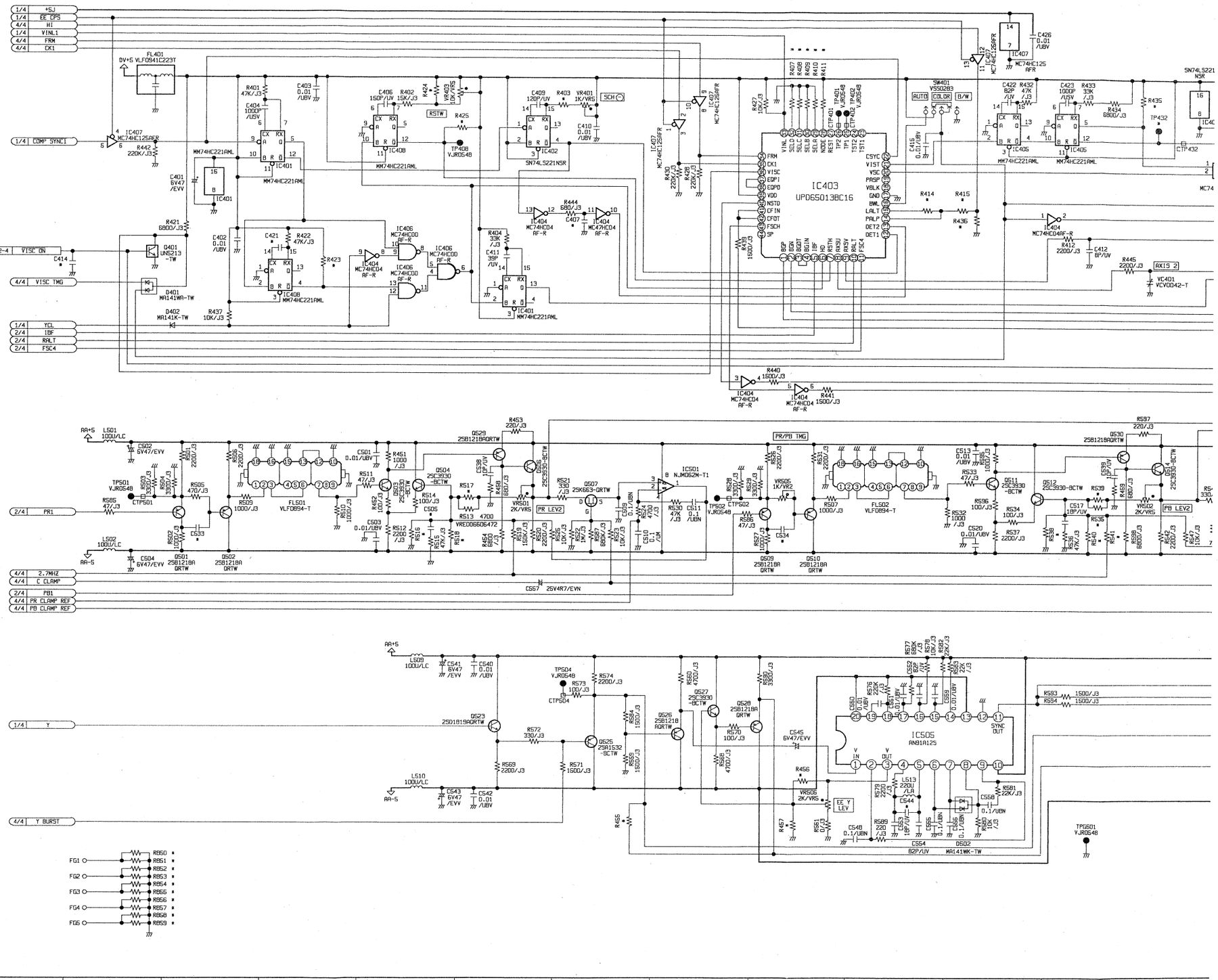

TIC DIAGRAM (3/4)

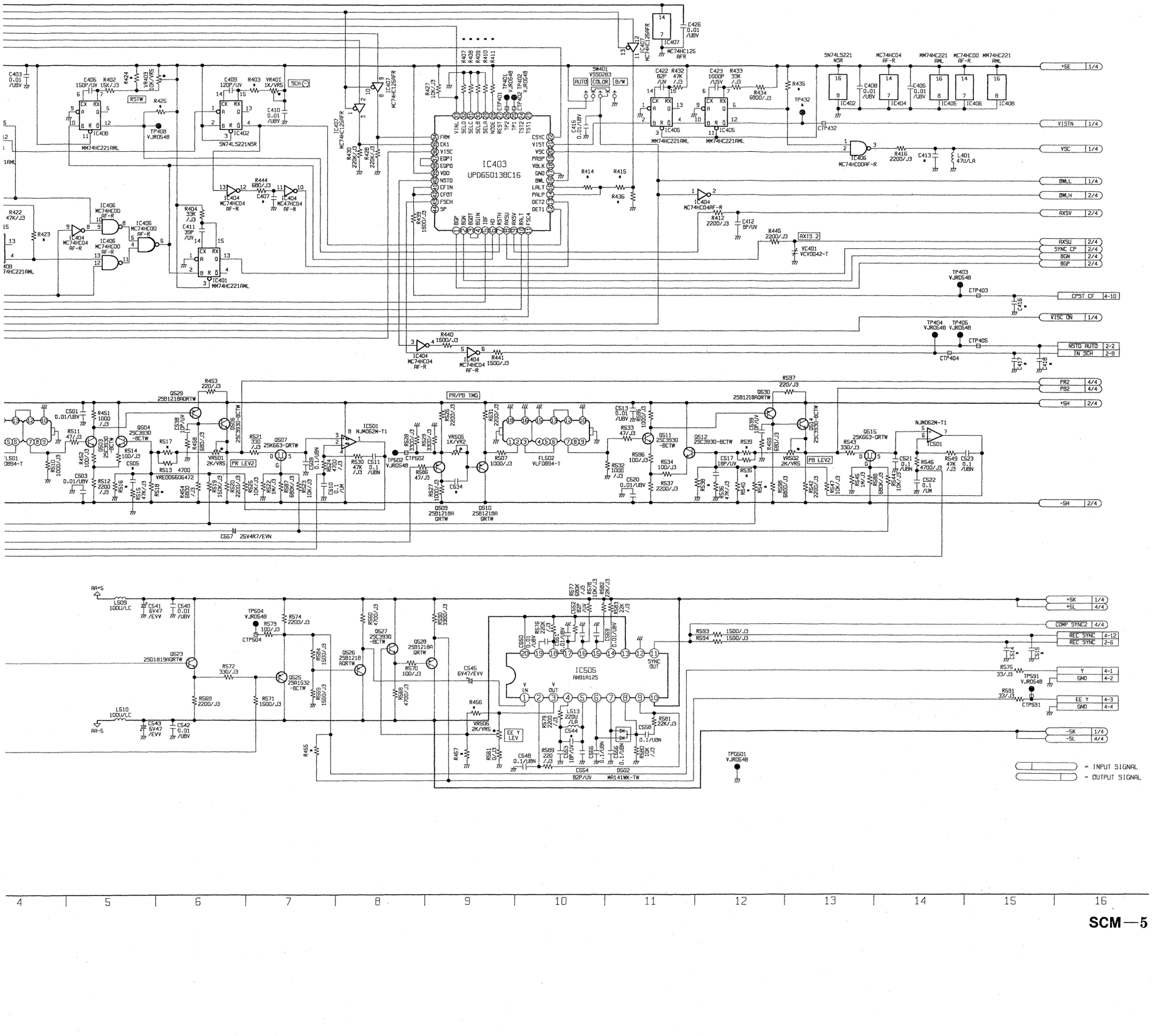

COMPARISON CHART OF NTSC MODEL AND PAL MODEL (FOR 4/4 DIAGRAM)

REF	NTSC	PAL
C638	*PAT/UV	*PAT/UV
C679	27P/UV	33P/UV
C738	*PAT/USV	*PAT/USV
C739	*PAT/USV	*PAT/USV
C740	*PAT/UV	*PAT/UV
C754	*PAT/UV	*PAT/UV
C947	*PAT/UV	120P/UV
C961	68P/UV	33P/UV
C962	6P/UV	5P/UV
C963	68P/UV	33P/UV
D703	*PAT	*PAT
FL601	*PAT	*PAT
FL604	*PAT	*PAT
L910	68U/LA	33U/LA
R611	*PAT/J3	*PAT/J3
R612	*PAT/J3	*PAT/J3
R613	*PAT/J3	*PAT/J3
R637	*PAT/J6	*PAT/J6
R656	1000/J3	100/J3
R708	2200/J3	3300/J3
R709	*PAT/J3	*PAT/J3
R715	*PAT/J3	*PAT/J3
R718	*PAT/J3	*PAT/J3
R737	*PAT/J3	*PAT/J3
R745	0/J3	*PAT/J3
R747	*PAT/J3	*PAT/J3
R936	*PAT/J3	0/J3
R937	0/J3	*PAT/J3
R939	0/J3	*PAT/J3
R940	*PAT/J3	0/J3
R941	0/J3	*PAT/J3
R944	*PAT/J3	0/J3
R945	0/J3	1500/J3
R947	2200/J3	1000/J3
R948	2200/J3	1000/J3
R979	*PAT/J3	*PAT/J3
R983	*PAT/J3	*PAT/J3
R984	*PAT/J3	*PAT/J3
R998	*PAT/J3	*PAT/J3
TP602	*PAT	*PAT
TP603	*PAT	*PAT
TP604	*PAT	*PAT
TP906	*PAT	*PAT

DECODER & CTCM SCHEMATIC DIAGRAM (4/4)

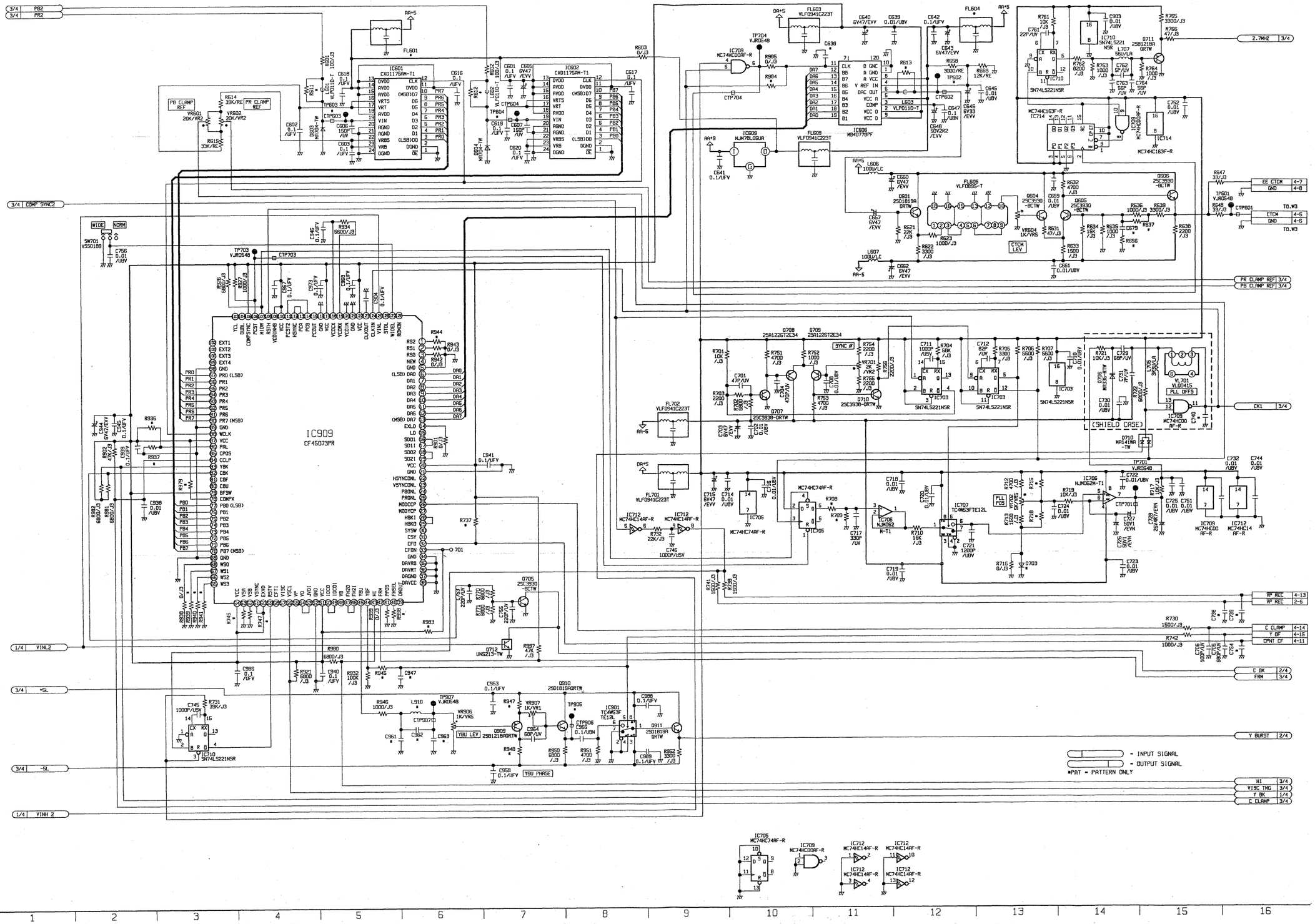

VIDEO 1 SCHEMATIC DIAGRAM (1/2)

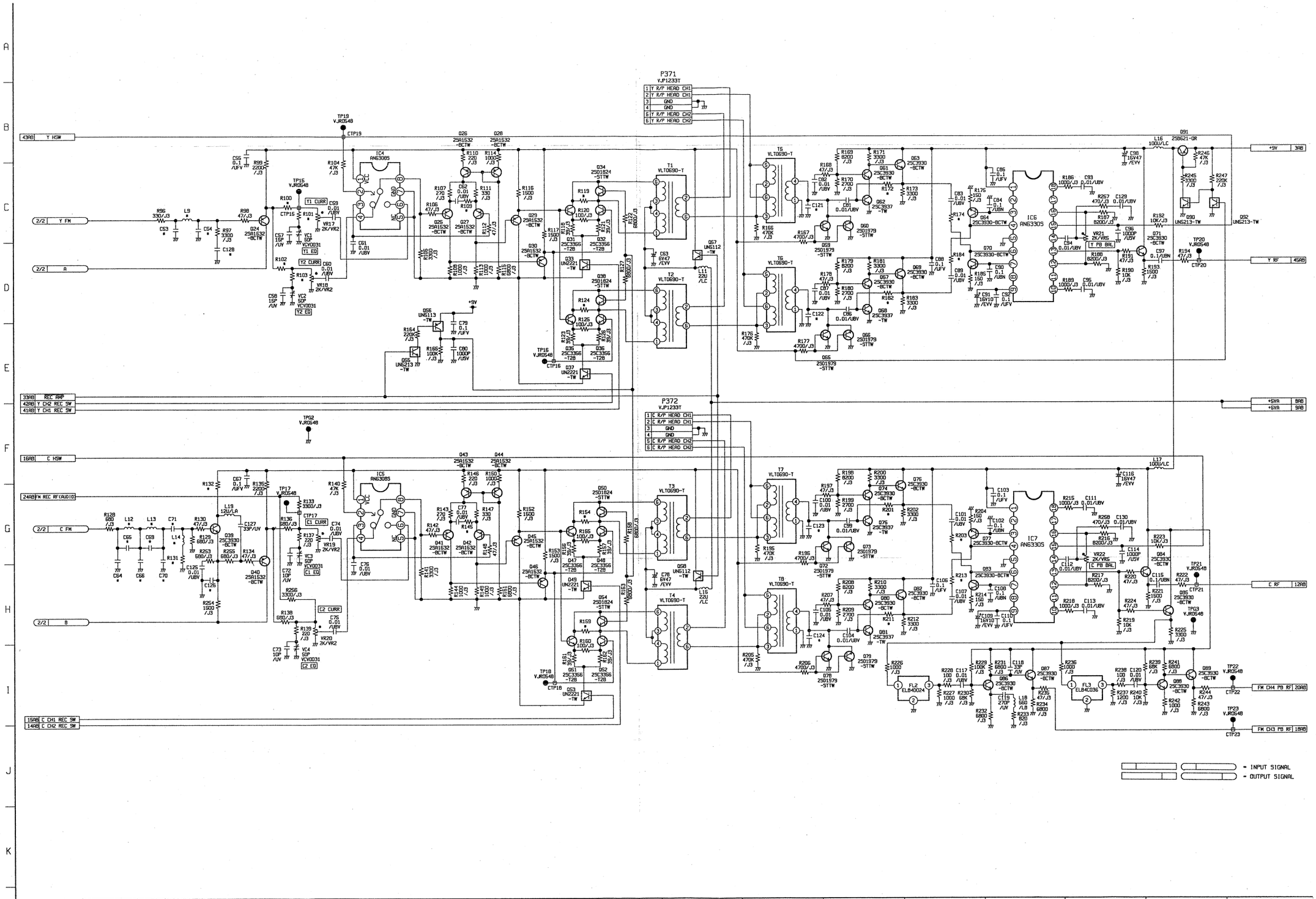

SCM—7

REVERSE SIDE

DECODER & CTCM 4/4

SCM—7

VIDEO 1 SCHEMATIC DIAGRAM (2/2)

COMPARISON CHRAT OF NTSC MODEL AND PAL MODEL (FOR 1/2 DIAGRAM)

REF	NTSC	PAL
C121	33P/UV	10P/UV
C122	33P/UV	10P/UV
C123	47P/UV	22P/UV
C124	47P/UV	22P/UV
C126	7P/UV	2P/UV
C128	22P/UV	12P/UV
C53	18P/UV	7P/UV
C54	39P/UV	22P/UV
C64	12P/UV	15P/UV
C65	*PAT/UV	2P/UV
C66	33P/UV	27P/UV
C69	*PAT/UV	8P/UV
C70	12P/UV	10P/UV
C71	120P/UV	150P/UV
L12	18U/LA	12U/LA
L13	18U/LA	10U/LA
L14	56U/LA	68U/LA
L9	4R7U/LA	2R7U/LA
R100	680/J3	470/J3
R101	270/J3	220/J3
R102	680/J3	470/J3
R103	270/J3	220/J3
R109	470/J3	1000/J3
R119	1800/J3	2700/J3
R124	1800/J3	2700/J3
R131	18/J3	33/J3
R132	470/J3	560/J3
R145	220/J3	330/J3
R154	1200/J3	1800/J3
R159	1200/J3	1800/J3
R172	100K/J3	150K/J3
R174	2200/J3	1500/J3
R182	100K/J3	150K/J3
R184	2200/J3	1500/J3
R201	100K/J3	150K/J3
R203	2200/J3	1500/J3
R211	100K/J3	150K/J3
R213	2200/J3	1500/J3
R8	3300/J6	2200/J6

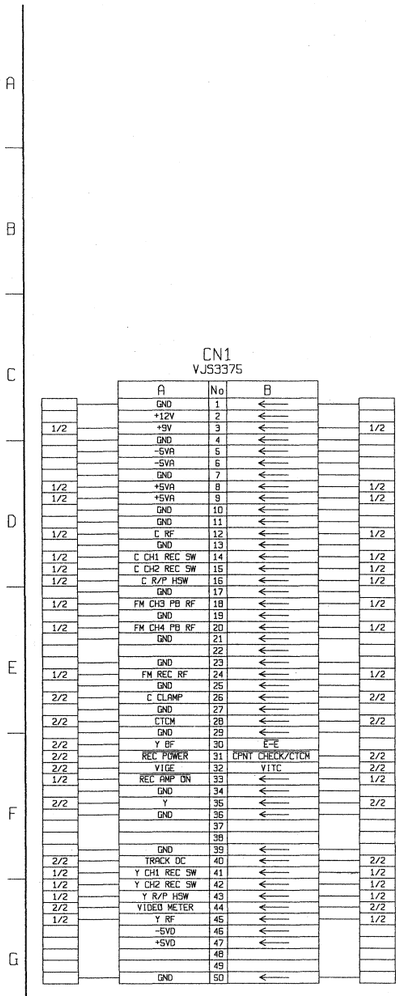

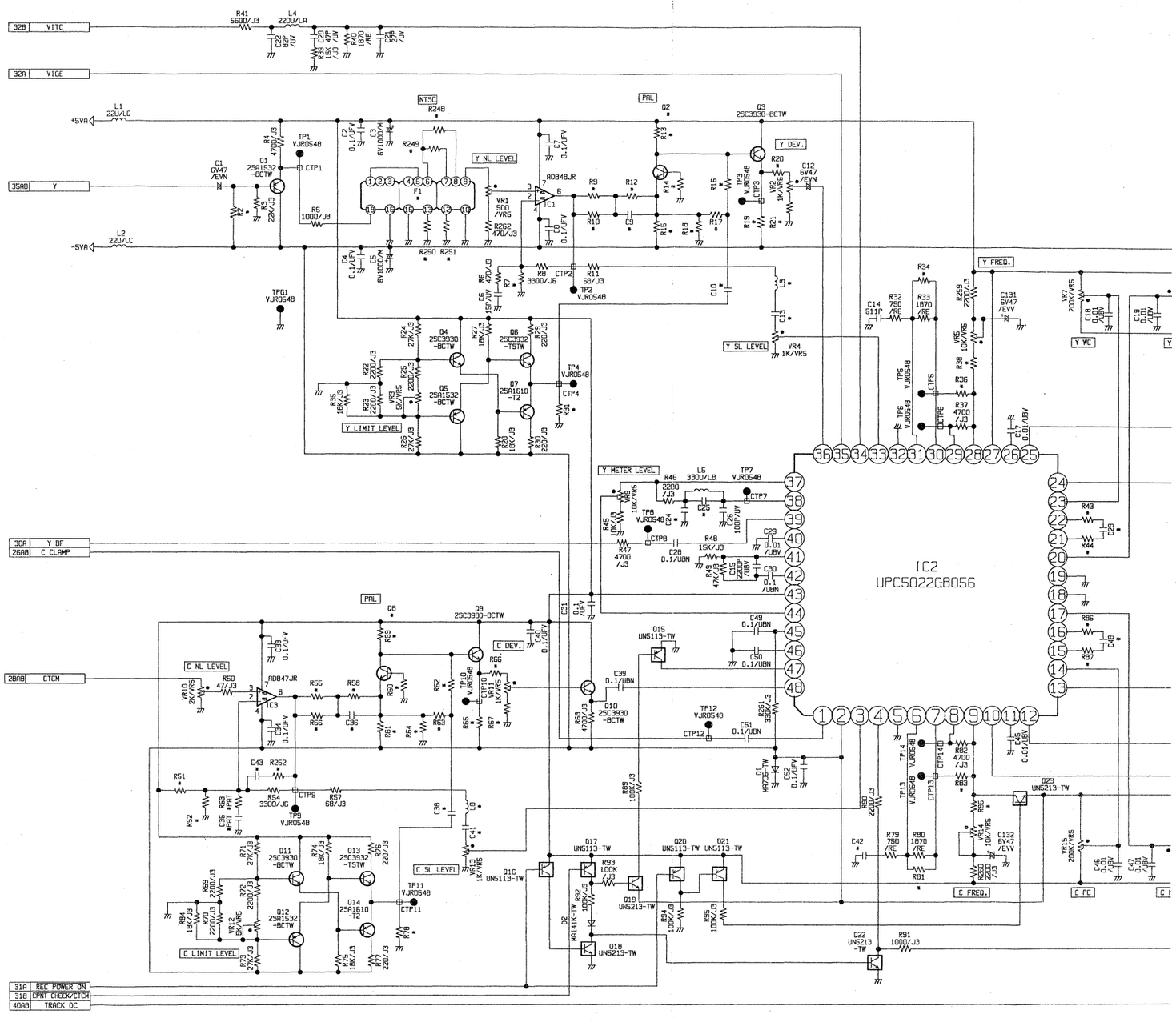

AGRAM (2/2)

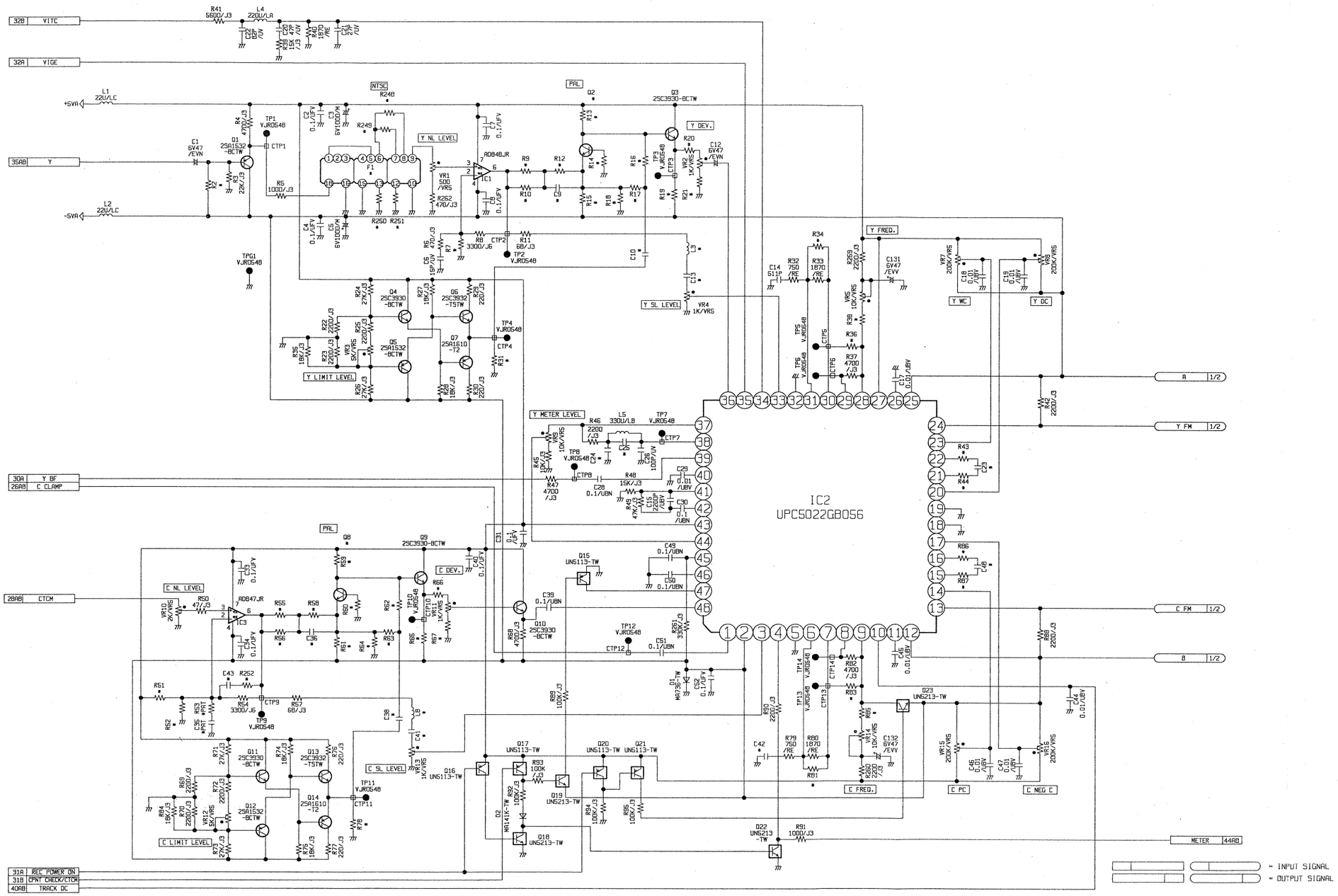

COMPARISON CHART OF NTSC MODEL AND PAL MODEL (FOR 2/2 DIAGRAM)

REF	NTSC	PAL
C10	379P/F	301P/F
C13	39P/UV	47P/UV
C23	22P/JUV	22P/UV
C24	18P/UV	22P/UV
C25	10P/UV	4P/UV
C36	180P/F	432P/F
C38	270P/F	301P/F
C41	39P/UV	68P/UV
C42	229P/D	379P/D
C43	5P/UV	*PAT/UV
C48	22P/JUV	22P/JTV
C9	180P/F	432P/F
F1	VLF0994	VLF0932
L3	22U/LA	33U/LA
L8	22U/LA	33U/LA
Q2	*PAT	2SC3930-BCTW
Q8	*PAT	2SC3930-BCTW
R10	*PAT/J3	27K/J3
R12	1500/RE	698/RE
R13	*PAT/RE	825/RE
R14	*PAT/J3	47/J3
R15	*PAT/J3	1200/J3
R16	47/J6	182/RE
R17	0/J3	*PAT/J3
R18	1000/RE	*PAT/RE
R19	2200/J3	6800/J3
R2	100K/J3	82K/J3
R20	470/J3	1000/J3
R21	560/J3	330/J3
R248	0/J3	*PAT/J3
R249	*PAT/J3	0/J3
R250	*PAT/J3	0/J3
R251	0/J3	*PAT/J3
R252	3300/J3	*PAT/J3
R31	24K/J3	22K/J3
R34	150K/J3	220K/J3
R36	3900/J3	3300/J3
R38	12K/J6	8200/J6
R43	33/J6	82
R44	33/J6	82
R51	*PAT/J3	27K/J3
R52	1500/J3	2200/J3
R55	0/J6	274/RE
R56	*PAT/J3	27K/J3
R58	1500/RE	698/RE
R59	*PAT/RE	825/RE
R60	*PAT/J3	47/J3
R61	*PAT/J3	1200/J3
R62	47/J6	182/RE
R63	0/J3	*PAT/J3
R64	1000/RE	*PAT/RE
R65	2200/J3	6800/J3
R66	470/J3	1000/J3
R67	560/J3	330/J3
R7	390/J3	390/J3
R78	24K/J3	22K/J3
R81	150K/J3	220K/J3
R83	3900/J3	3300/J3
R85	15K/J6	12K/J6
R86	33/J6	56
R87	33/J6	56
R9	0/J6	274/RE

COMPARISON CHRAT OF NTSC MODEL AND PAL MODEL (FOR 1/2 DIAGRAM)

REF	NTSC	PAL
C10	7P/UV	*PAT/UV
C11	15P/UV	*PAT/UV
C118	*PAT/UV	*PAT/UV
C119	100P/UV	82P/UV
C134	100P/UV	68P/UV
C150	*PAT/UBN	0.018/UBN
C151	*PAT/UBN	4700P/UBV
C19	680P/USV	270P/UV
C21	27P/UV	18P/UV
C22	100P/UV	68P/UV
C32	*PAT/UV	*PAT/UV
C33	390P/UV	330P/UV
C34	*PAT/UV	*PAT/UV
C35	56P/UV	47P/UV
C47	220P/UV	150P/UV
C59	82P/UV	*PAT/UV
C6	33P/UV	22P/UV
C70	33P/UV	82P/UV
C8	3P/UV	7P/UV
C82	68P/UV	27P/UV
C83	169P(F)	*PAT(F)
C84	379P(F)	*PAT(F)
C89	*PAT(F)	301P(F)
C9	39P/UV	33P/UV
C90	*PAT/UV	6P/UV
C91	*PAT(F)	301P(F)
DL1	VLD0199	VLD0190
FL1	VLF0787	VLF0658
FL2	VLF1007	VLF1042
L10	2R7U/LA	2R2U/LA
L11	22U/LA	18U/LA
L19	1R0U/LA	*PAT/LA
L20	1R0U/LA	*PAT/LA
L27	*PAT/LA	R47U/LA
L4	10U/LA	12U/LA
L5	8R2U/LA	*PAT/LA
L7	6R8U/LA	10U/LA
L8	3R3U/LA	2R7U/LA
Q123	*PAT	2SA1532-BCTW
Q36	*PAT	2SC3932-TW
Q37	*PAT	2SA1610-T2
Q38	*PAT	2SA1610-T2
R109	*PAT/J3	0/J3
R110	*PAT/J3	0/J3
R115	180K/J3	*PAT/J3
R123	2200/J3	470/J3
R131	*PAT/J3	*PAT/J3
R136	*PAT/J3	22K/J3
R137	*PAT/J3	22K/J3
R139	390/J3	470/J3
R14	1000/J3	820/J3
R142	1620/RE	2200/J6
R144	24K/J3G	22K/J3G
R152	47/J3	*PAT/J3
R153	*PAT/J3	47/J3
R154	*PAT/RE	174/RE
R155	*PAT/RE	825/RE
R156	*PAT/J6	*PAT/J6
R157	*PAT/J6G	330/J6G
R158	*PAT/RE	402/RE
R159	*PAT/RE	1000/RE
R16	220/J3	120/J3
R160	*PAT/J3	1500/J3
R162	*PAT/J3	47/J3
R169	1500/RE	390/RE
R170	1000/1000PPM	1000/2200PPM
R217	*PAT/J3	56K/J3
R220	*PAT/J3	*PAT/J3
R24	820/J3	470/J3
R25	1800/J3	1500/J3
R257	820/J3	0/J3
R26	1500/J3	680/J3
R260	3900/J3	6800/J3
R27	820/J3	680/J3
R28	1000/J3	0/J3
R282	0/J3	10/J3
R283	*PAT/J3	2700/J3
R288	56K/J3	*PAT/J3
R29	1000/J3	2200/J3
R290	*PAT/J3	*PAT/J3
R299	*PAT/J6G	180/J6G
R30	820/J3	0/J3
R33	180/J3	68/J3
R46	150/J3	68/J3
R479	11K/J6G	10K/J6G
R48	560/J3	680/J3
R481	*PAT/J3	*PAT/J3
R482	*PAT/J3	*PAT/J3
R483	*PAT/J3	*PAT/J3
R50	0/J3	220/J3
VR12	*PAT/VR5	10K/VR5
VR15	*PAT/VR5	*PAT/VR5

VIDEO 2 SCHEMATIC DIAGRAM (1/2)

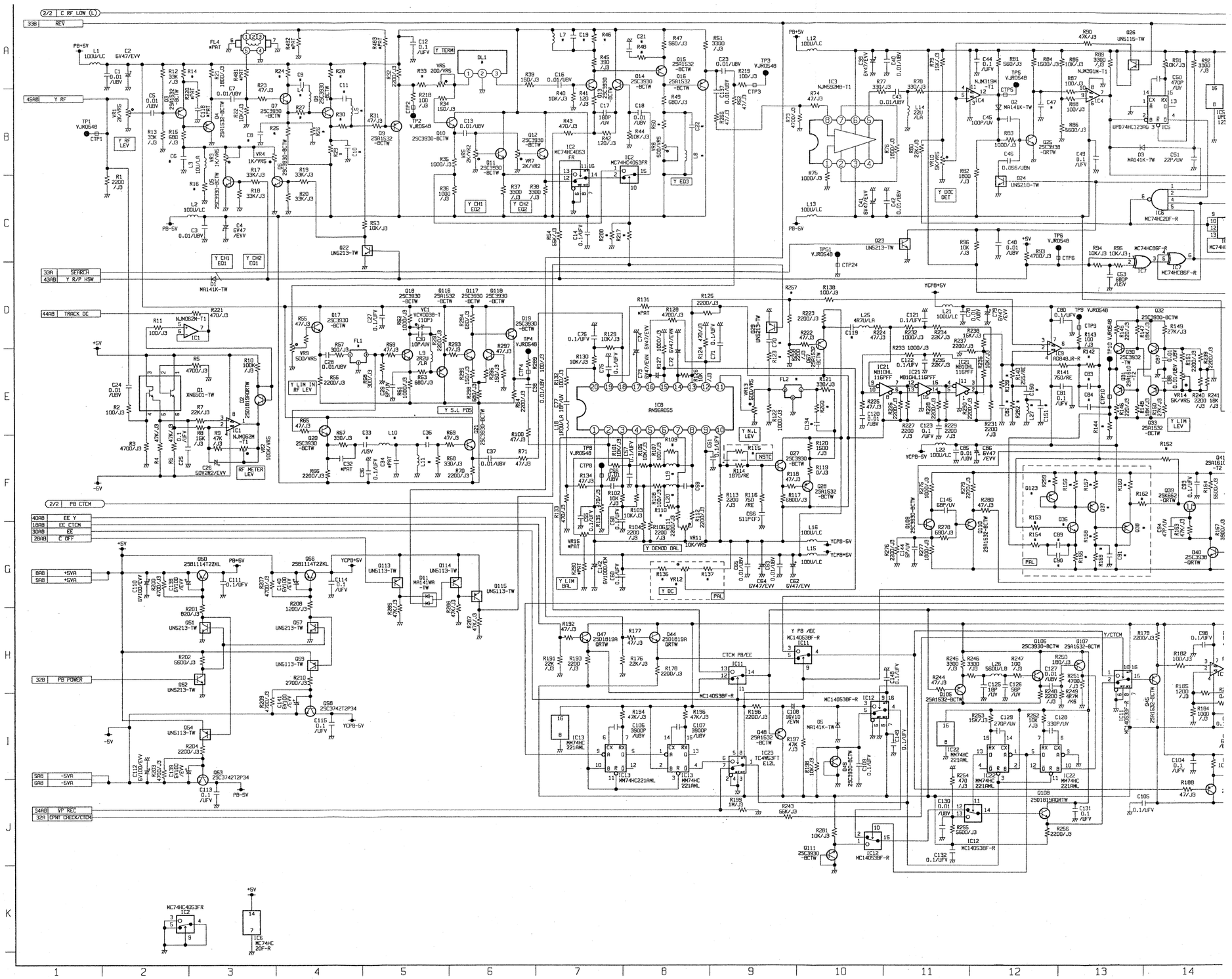
2/2 C RF LOW (L)
33B REV
45AB Y RF
TP1 VJR0548
CTP1
Y RF LEV
VR1 2K/VRS
PB+5V
PB-5V
L1 100U/LC
L2 100U/LC
L3 10U/LA
C1 0.01 /UBV
C2 6V47/EVV
C3 0.01/UBV
C4 6V47 /EVV
R1 2200 /J3
R2 100/J3
R3 4700/J3
R4 47K/J3
R5 4700/J3
R6 47K/J3
R7 22K/J3
R8 15K/J3
R9 47K /J3
R10 100K/J3
R11 100/J3
R12 33K /J3
R13 33K /J3
R14 *PAT
R15 680 /J3
R16 680/J3
R17 33K/J3
R18 33K/J3
R19 33K/J3
R20 33K/J3
R21 *PAT
R22 10K/J3
R23 47/J3
R24 *PAT
R25 *PAT
R26 *PAT
R27 *PAT
R28 *PAT
R29 *PAT
R30 *PAT
R31 47/J3
R32 2200/J3
R33 200/VRS
R34 150/J3
R35 1000/J3
R36 1000 /J3
R37 3300 /J3
R38 3300 /J3
R39 150/J3
R40 10K/J3
R41 120 /J3
R42 120/J3
R43 470/J3
R44 10K/J3
R45 390 /J3
R46 *PAT
R47 560/J3
R48 *PAT
R49 680/J3
R50 *PAT
R51 3300 /J3
R52 *PAT
R53 10K/J3
R54 560/J3
R55 47/J3
R56 2200/J3
R57 300/J3
R58 *PAT
R59 47/J3
R60 *PAT
R61 *PAT
R62 *PAT
R63 *PAT
R64 *PAT
R65 47/J3
R66 2200/J3
R67 330/J3
R68 330/J3
R69 47/J3
R70 2200/J3
R71 47/J3
R72 4700/J3
R73 4700/J3
R74 47/J3
R75 1000/J3
R76 1800 /J3
R77 330/J3
R78 330/J3
R79 150/J3
R80 1800 /J3
R81 560/J3
R82 1800 /J3
R83 1000/J3
R84 1500/J3
R85 10K/J3
R86 5600/J3
R87 100/J3
R88 100/J3
R89 3300 /J3
R90 47K/J3
R91 10K/J3
R92 3300 /J3
R93 4700/J3
R94 10K/J3
R95 10K/J3
R96 10K /J3
R97 *PAT
R98 *PAT
R99 *PAT
R100 47/J3
R101 *PAT
R102 *PAT
R103 10K/J3
R104 2200 /J3
R105 2200 /J3
R106 2200 /J3
R107 100/J3
R108 *PAT
R109 *PAT
R110 *PAT
R111 *PAT
R112 2200/J3
R113 2200 /J3
R114 1870/RE
R115 NSTC
R116 750 /RE
R117 6800/J3
R118 47/J3
R119 0/J3
R120 1600 /J3
R121 330/J3
R122 1000/J3
R123 2200 /J3
R124 470/J3
R125 2200/J3
R126 *PAT
R127 100/J3
R128 4700/J3
R129 10K/J3
R130 10K/J3
R131 *PAT
R132 100/J3
R133 100/J3
R134 47/J3
R135 470/J3
R136 *PAT
R137 *PAT
R138 100/J3
R139 *PAT
R140 *PAT
R141 *PAT
R142 *PAT
R143 100 /J3
R144 *PAT
R145 220/J3
R146 220/J3
R147 27K/J3
R148 *PAT
R149 27K/J3
R150 *PAT
R151 2200/J3
R152 *PAT
R153 *PAT
R154 *PAT
R155 *PAT
R156 *PAT
R157 *PAT
R158 *PAT
R159 *PAT
R160 *PAT
R161 *PAT
R162 *PAT
R163 *PAT
R164 *PAT
R165 *PAT
R166 *PAT
R167 *PAT
R168 *PAT
R169 *PAT
R170 *PAT
R171 *PAT
R172 *PAT
R173 *PAT
R174 *PAT
R175 *PAT
R176 22K/J3
R177 47/J3
R178 2200/J3
R179 2200/J3
R180 *PAT
R181 *PAT
R182 100/J3
R183 *PAT
R184 1000 /J3
R185 1200 /J3
R186 *PAT
R187 *PAT
R188 47/J3
R189 *PAT
R190 *PAT
R191 22K /J3
R192 47/J3
R193 2200 /J3
R194 47K/J3
R195 *PAT
R196 2200/J3
R197 47K /J3
R198 *PAT
R199 1M/J3
R200 *PAT
R201 820/J3
R202 5600/J3
R203 *PAT
R204 2200/J3
R205 *PAT
R206 *PAT
R207 4700/J3
R208 1200/J3
R209 4700/J3
R210 2700/J3
R211 *PAT
R212 *PAT
R213 *PAT
R214 *PAT
R215 *PAT
R216 *PAT
R217 *PAT
R218 100 /J3
R219 100/J3
R220 *PAT
R221 470/J3
R222 2200/J3
R223 2200/J3
R224 47/J3
R225 *PAT
R226 *PAT
R227 2200 /J3
R228 *PAT
R229 2200 /J3
R230 *PAT
R231 2200 /J3
R232 1000/J3
R233 1000/J3
R234 22K/J3
R235 22K/J3
R236 15K/J3
R237 2200/J3
R238 *PAT
R239 *PAT
R240 2200 /J3
R241 *PAT
R242 *PAT
R243 56K/J3
R244 47/J3
R245 3300 /J3
R246 3300 /J3
R247 100 /J3
R248 2200 /J3
R249 *PAT
R250 180/J3
R251 4700 /J3
R252 10K /J3
R253 15K/J3
R254 470 /J3
R255 5600/J3
R256 2200/J3
R257 *PAT
R258 *PAT
R259 *PAT
R260 *PAT
R261 *PAT
R262 *PAT
R263 *PAT
R264 *PAT
R265 *PAT
R266 *PAT
R267 *PAT
R268 *PAT
R269 *PAT
R270 *PAT
R271 *PAT
R272 *PAT
R273 *PAT
R274 *PAT
R275 *PAT
R276 2200/J3
R277 1800/J3
R278 680/J3
R279 *PAT
R280 47/J3
R281 10K/J3
C1 0.01 /UBV
C2 6V47/EVV
C3 0.01/UBV
C4 6V47 /EVV
C5 0.01 /UBV
C6 *PAT
C7 0.01/UBV
C8 *PAT
C9 *PAT
C10 6V100/EVV
C11 *PAT
C12 0.1 /UFV
C13 0.01/UBV
C14 0.1/UFV
C15 *PAT
C16 0.01/UBV
C17 *PAT
C18 0.01 /UBV
C19 *PAT
C20 *PAT
C21 *PAT
C22 *PAT
C23 0.01/UBV
C24 0.01 /UBV
C25 *PAT
C26 50V2R2/EVV
C27 0.1/UFV
C28 0.01/UBV
C29 *PAT
C30 10P/UV
C31 *PAT
C32 *PAT
C33 /USV
C34 *PAT
C35 *PAT
C36 *PAT
C37 0.01/UBV
C38 0.01/UBV
C39 *PAT
C40 0.01/UBV
C41 *PAT
C42 0.01/UBV
C43 0.01/UBV
C44 0.1 /UFV
C45 100P/UV
C46 0.056/UBN
C47 *PAT
C48 0.01 /UBV
C49 0.1 /UFV
C50 470P /UV
C51 *PAT
C52 *PAT
C53 68P /USV
C54 *PAT
C55 *PAT
C56 *PAT
C57 *PAT
C58 *PAT
C59 *PAT
C60 *PAT
C61 *PAT
C62 *PAT
C63 *PAT
C64 6V47/EVV
C65 0.01/UBV
C66 S11F(F)
C67 *PAT
C68 *PAT
C69 *PAT
C70 *PAT
C71 0.1/UFV
C72 6V47/EVV
C73 *PAT
C74 *PAT
C75 *PAT
C76 0.1/UFV
C77 *PAT
C78 *PAT
C79 *PAT
C80 0.1/UFV
C81 0.1 /UFV
C82 *PAT
C83 *PAT
C84 *PAT
C85 *PAT
C86 6V47 /EVV
C87 *PAT
C88 *PAT
C89 *PAT
C90 *PAT
C91 *PAT
C92 *PAT
C93 *PAT
C94 *PAT
C95 *PAT
C96 *PAT
C97 *PAT
C98 *PAT
C99 *PAT
C100 *PAT
C101 *PAT
C102 *PAT
C103 0.1/UFV
C104 0.1 /UFV
C105 0.1/UFV
C106 3900P /UBV
C107 3900P /UBV
C108 16V10 /EVN
C109 *PAT
C110 6V100/EVV
C111 0.1/UFV
C112 6V100/EVV
C113 0.1 /UFV
C114 0.1 /UFV
C115 0.1 /UFV
C116 *PAT
C117 *PAT
C118 *PAT
C119 *PAT
C120 *PAT
C121 0.1/UFV
C122 0.1/UFV
C123 0.1 /UFV
C124 *PAT
C125 18P /UV
C126 56P /UV
C127 0.01 /UBV
C128 *PAT
C129 270P/UV
C130 0.01 /UBV
C131 0.1 /UFV
C132 0.1/UFV
C133 *PAT
C134 *PAT
C135 *PAT
C136 *PAT
C137 *PAT
C138 *PAT
C139 *PAT
C140 *PAT
C141 *PAT
C142 6V100/EVV
C143 *PAT
C144 5P/UV
C145 68P/UV
C146 *PAT
C147 *PAT
C148 0.1/UFV
C149 *PAT
C150 *PAT
C151 *PAT
C152 *PAT
C153 *PAT
C154 *PAT
C155 *PAT
C156 *PAT
C157 *PAT
C158 *PAT
C159 *PAT
C160 *PAT
C161 *PAT
C162 *PAT
C163 *PAT
C164 *PAT
C165 *PAT
C166 *PAT
C167 *PAT
C168 *PAT

GRAM (1/2)

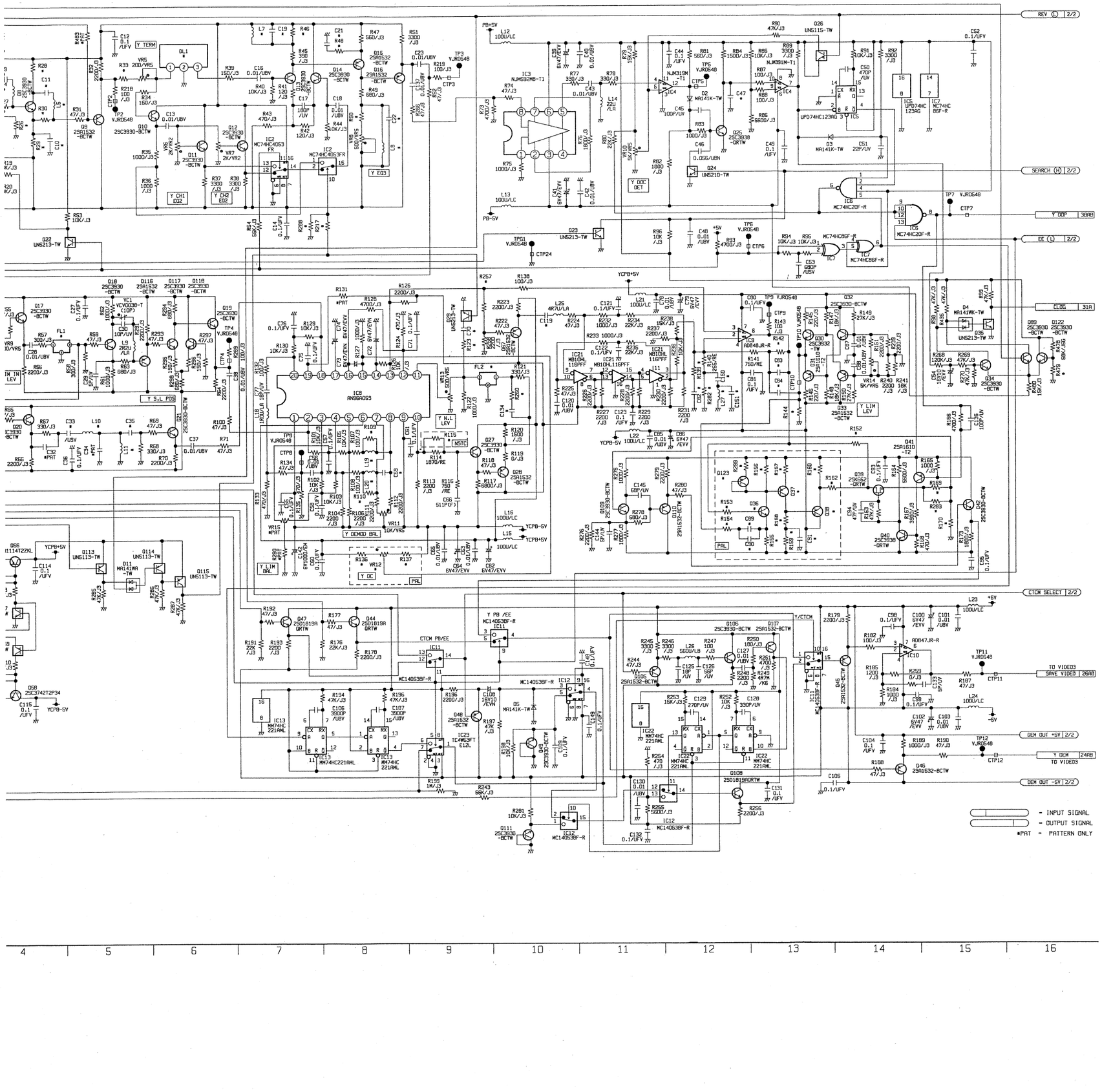

COMPARISON CHART OF NTSC MODEL AND PAL MODEL (FOR 2/2 DIAGRAM)

REF	NTSC	PAL
C205	*PAT/UV	*PAT/UV
C208	39P/UV	33P/UV
C210	39P/UV	*PAT/UV
C221	15P/UV	27P/UV
C209	*PAT/UV	*PAT/UV
C222	120P/UV	100P/UV
C226	560P/UV	*PAT/UV
C228	220P/UV	*PAT/UV
C229	560P/UV	1000P/KBV
C230	33P/UV	27P/UV
C231	100P/UV	56P/UV
C232	*PAT/UV	9P/UV
C233	33P/UV	18P/UV
C234	*PAT/UV	*PAT/UV
C235	39P/UV	27P/UV
C236	*PAT/UV	*PAT/UV
C237	*PAT/UV	*PAT/UV
C241	*PAT/UV	*PAT/UV
C242	470P/UV	220P/UV
C243	*PAT/UV	100P/UV
C244	68P/UV	0.01/UBV
C273	229P(F)	379P(F)
C288	82P/UV	39P/UV
C290	169P(F)	*PAT(F)
C291	270P(F)	*PAT(F)
C297	*PAT(F)	301P(F)
C298	*PAT/UV	6P/UV
C299	*PAT(F)	301P(F)
C303	*PAT/UV	*PAT/UV
C305	*PAT/UV	27P/UV
FL3	VLF0821	VLF0714
L32	*PAT/LA	*PAT/LA
L33	10U/LA	12U/LA
L34	10U/LA	*PAT/LA
L37	180U/LA	470U/LB
L38	68U/LA	56U/LA
L40	8R2U/LA	6R8U/LA
L42	*PAT/LA	*PAT/LA
L44	3R3U/LA	2R7U/LA
L45	33U/LA	5R6U/LA
Q112	*PAT	UN5213-TW
Q124	*PAT	2SA1532-BCTW
Q97	*PAT	2SC3932-TW
Q98	*PAT	2SA1610-T2
Q99	*PAT	2SA1610-T2
R264	15K/J3	2700/J3
R271	100K/J3	82K/J3
R273	47K/J3	56K/J3
R304	*PAT/J3	*PAT/J3
R313	1000/J3	0/J3
R314	1000/J3	2200/J3
R315	820/J3	0/J3
R328	1000/J3	560/J3
R330	*PAT/J3	*PAT/J3
R335	330/J3	390/J3
R336	330/J3	390/J3
R390	*PAT/J3	*PAT/J3
R391	*PAT/J3	*PAT/J3
R396	*PAT/J3	*PAT/J3
R412	*PAT/J3	*PAT/J3
R418	*PAT/J3	22K/J3
R419	*PAT/J3	22K/J3
R421	1000/J3	330/J3
R424	1620/RE	2200/J6
R426	24K/J3G	22K/J3G
R436	*PAT/J3	47/J3
R437	*PAT/RE	825/RE
R438	*PAT/RE	174/RE
R439	*PAT/J6	*PAT/J6
R440	*PAT/J6G	330/J6G
R441	*PAT/RE	402/RE
R442	*PAT/RE	1000/RE
R443	*PAT/J3	2200/J3
R445	*PAT/J3	47/J3
R446	47/J3	*PAT/J3
R453	1500/RE	330/RE
R454	1000/1000PPM	1000/2200PPM
R462	*PAT/J3	*PAT/J3
R466	*PAT/J3	1000/J3
R467	*PAT/J3	56K/J3
R469	*PAT/J3	*PAT/J3
R484	*PAT/J3	*PAT/J3
R485	*PAT/J3	*PAT/J3
R486	*PAT/J3	*PAT/J3
R487	*PAT/J6G	180/J6G
VR28	*PAT/VR5	10K/VR5
VR31	*PAT/VR5	*PAT/VR5

VIDEO 2 SCHEMATIC DIAGRAM (2/2)

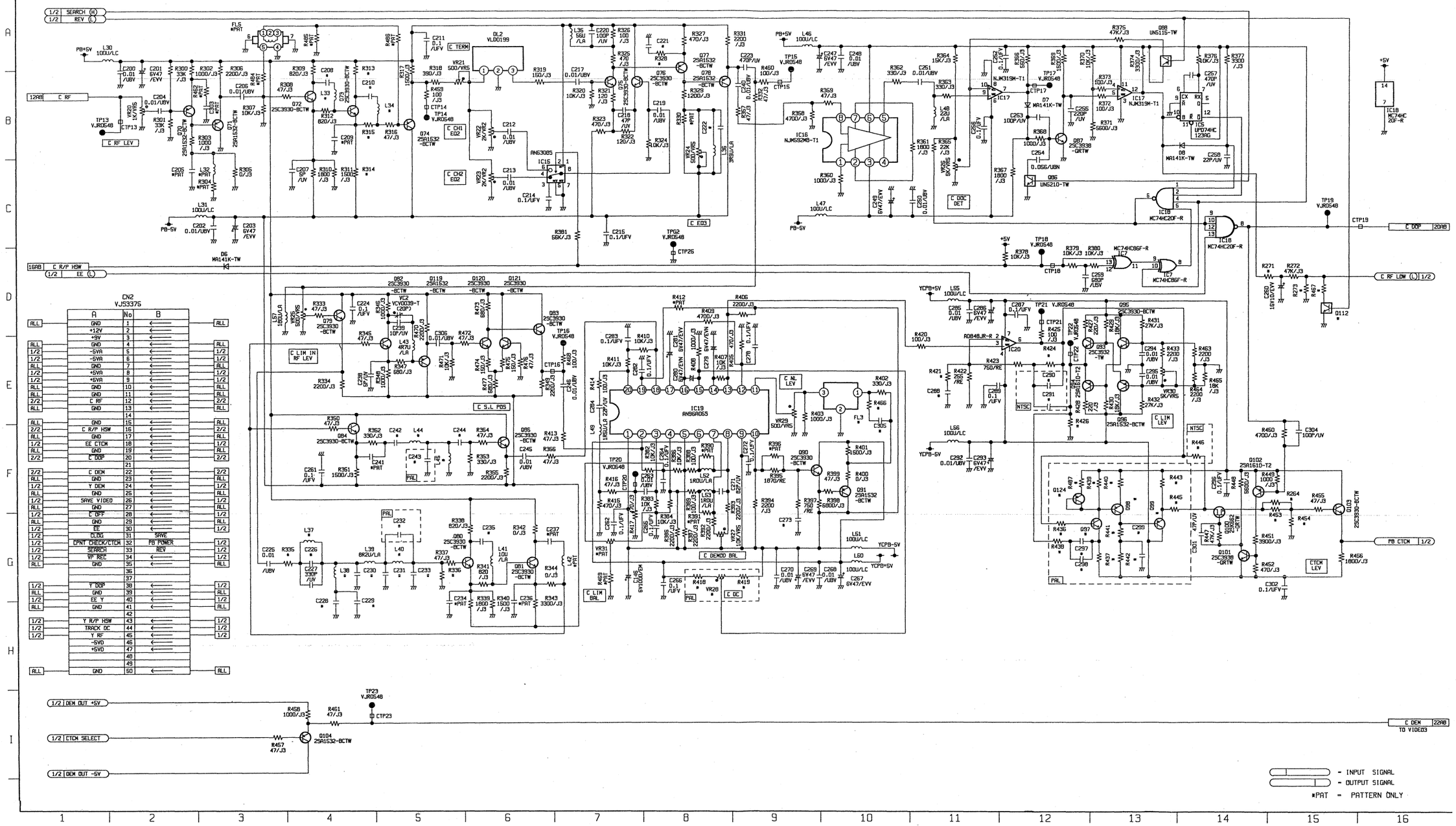

SCM—10

VIDEO 3 SCHEMATIC DIAGRAM (1/3)

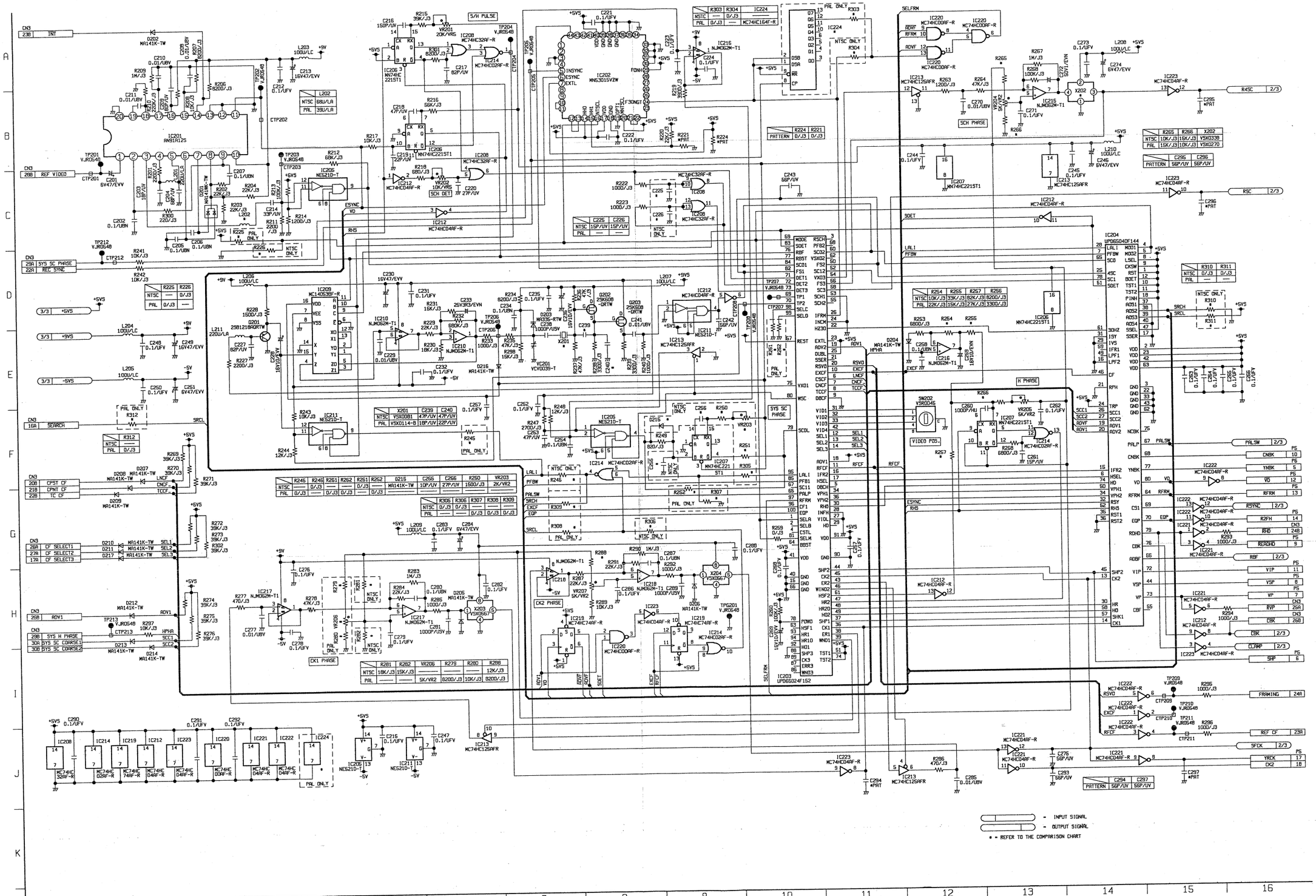

- INPUT SIGNAL
- OUTPUT SIGNAL
- * = REFER TO THE COMPARISON CHART

REVERSE SIDE
VIDEO 2 2/2

VIDEO 3 SCHEMATIC DIAGRAM (2/3)

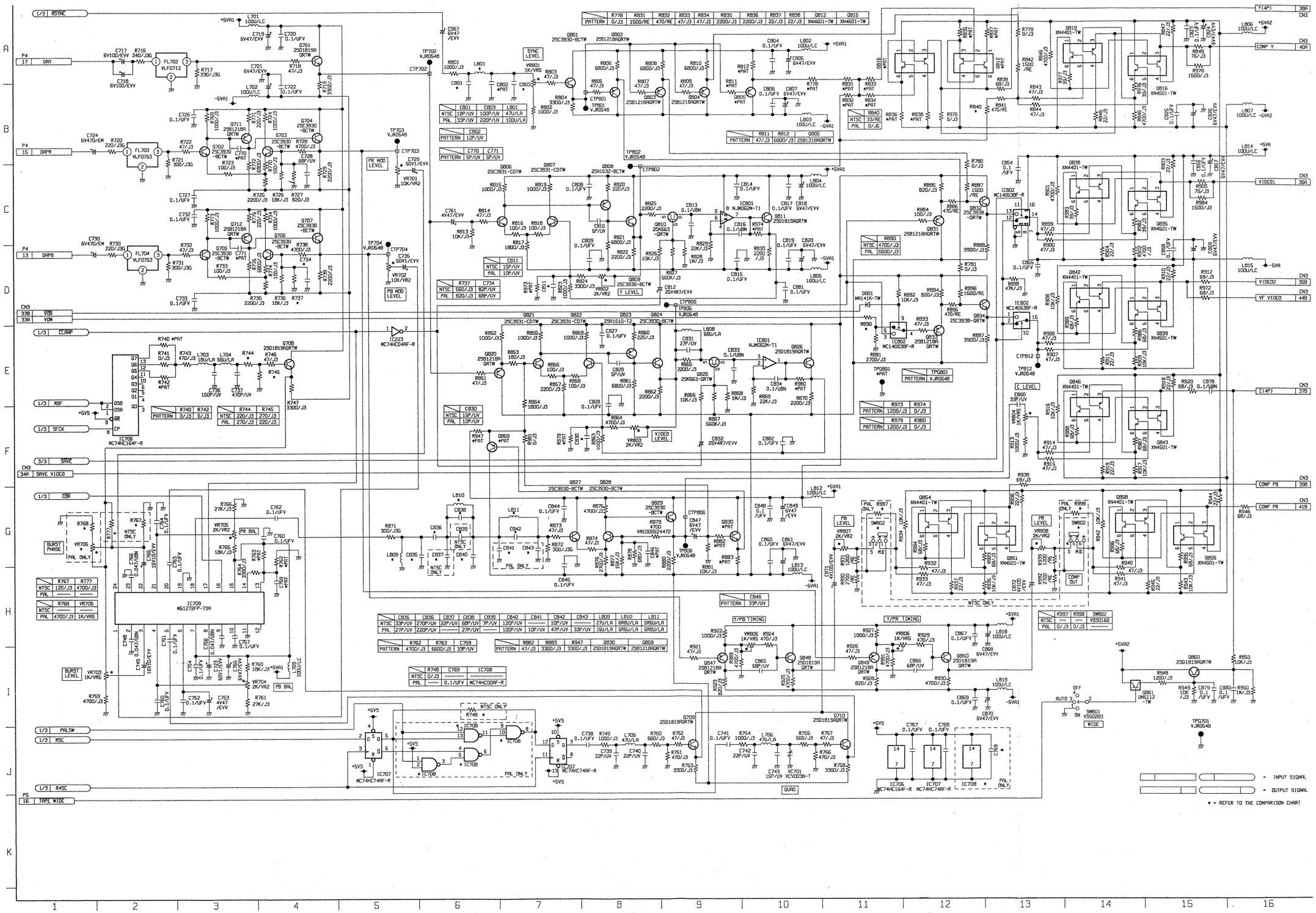

VIDEO 3 SCHEMATIC DIAGRAM (3/3)

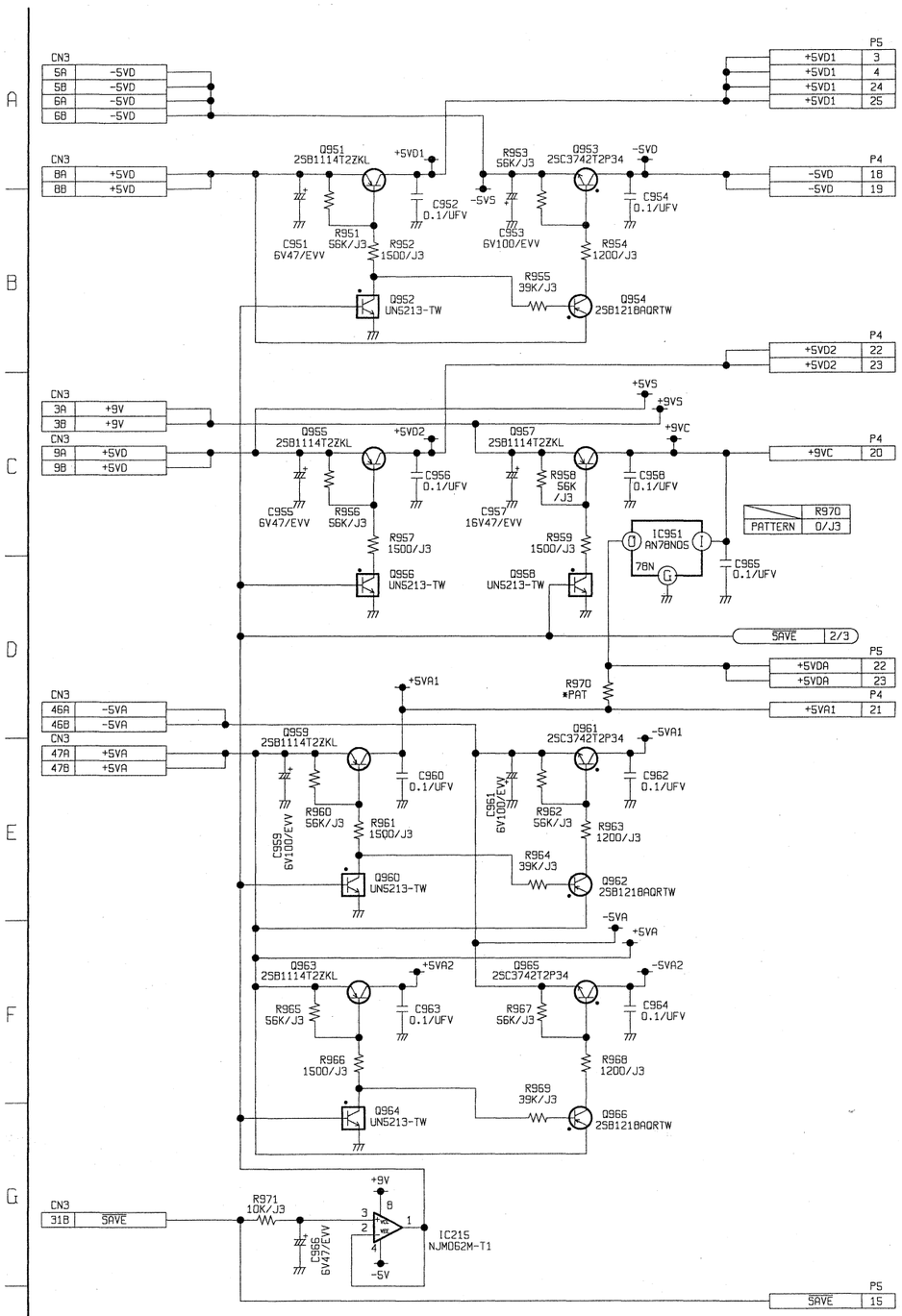

P4
VJS2907D025

	CTP1	GND	1
		GND	2
3/3	CTP3	EJECT TAPE	3
3/3	CTP4	Y DEM	4
3/3	CTP5	EE	5
3/3	CTP6	C DEM	6
		GND	7
3/3	CTP8	TAPE V	8
3/3	CTP9	Y HEAD SW	9
3/3	CTP10	C DOP	10
3/3	CTP11	Y DOP	11
3/3	CTP12	VIDEO G	12
2/3		DA PB	13
3/3	CTP14	SEARCH	14
2/3		DA PR	15
3/3	CTP16	COFF	16
		DA Y	17
	CTP18	-5VD	18
		-5VD	19
3/3	CTP20	+9VC	20
3/3		+5VA1	21
3/3	CTP22	+5VD2	22
		+5VD2	23
		GND	24
		GND	25

D1 MA141K-TW
D2 MA141K-TW
TP701 VJR0548
D401 MA141K-TW
D403 MA141K-TW
D402 MA141K-TW

P5
VJS2907D025

	CTP26	GND	1
		GND	2
3/3		+5VD1	3
		+5VD1	4
1/3		YNBK	5
1/3	CTP31	SHP	6
1/3	CTP32	VP	7
1/3	CTP33	VSP	8
1/3	CTP34	READHD	9
1/3	CTP35	CNBK	10
1/3	CTP36	VIP	11
1/3	CTP37	VD	12
1/3	CTP38	RFRM	13
1/3	CTP39	R2FH	14
3/3		SAVE	15
2/3	CTP41	TAPE WIDE	16
1/3	CTP42	YRCK	17
1/3	CTP43	CK2	18
3/3		Y DEM 2	19
3/3	CTP45	Y PB SYNC	20
3/3	CTP46	C PB SYNC	21
3/3	CTP47	+5VDA	22
	CTP49	+5VDA	23
		+5VD1	24
		+5VD1	25

CN3
VJS3375

	A	No	B	
	GND	1	GND	
3/3	+12V	2	+12V	3/3
3/3	+9V	3	+9V	3/3
	GND	4	GND	
3/3	-5VD	5	-5VD	3/3
3/3	-5VD	6	-5VD	3/3
	GND	7	GND	
3/3	+5VD	8	+5VD	3/3
3/3	+5VD	9	+5VD	3/3
	GND	10	GND	
	GND	11	GND	
3/3	CDEM	12	GND	
	GND	13	GND	
3/3	YDEM	14	GND	
	GND	15	GND	
1/3,3/3	SEARCH	16	COFF	3/3
1/3	CF SELECT3	17	C PB SYNC	3/3
3/3	Y PB SYNC	18	EE	3/3
3/3	Y R/P HSW	19	TAPEV	3/3
3/3	YDOP	20	CPST CF	1/3
3/3	CDOP	21	CPNT CF	1/3
1/3	REC SYNC	22	TC CF	1/3
1/3	REF CF	23	INT	1/3
1/3	FRAMING	24	RHD	1/3
1/3	RVP	25	ADV1	1/3
1/3	CF SELECT1	26	CBK	1/3
3/3	CF SELECT2	27	EJECT TAPE	3/3
	GND	28	REF VIDEO	1/3
1/3	SYS SC PHASE	29	SYS H PHASE	1/3
1/3	SYS SC CRS1	30	SYS SC CRS2	1/3
3/3	VIDEO G	31	SAVE	3/3
2/3	REC POWER	32	PB POWER	
2/3	VOW	33	VOB	2/3
	SAVE VIDEO	34	GND	
2/3	GND	35	VIDEO2	2/3
2/3	VIDEO1	36	GND	
2/3	GND	37	C 4P	2/3
	Y 4P	38	GND	
2/3	GND	39	COMP PB	2/3
	COMP Y	40	GND	
	GND	41	COMP PR	2/3
	GND	42	GND	
		43		
3/3	Y DEM 2	44	VF VIDEO	2/3
	GND	45	GND	
3/3	-5VA	46	-5VA	3/3
3/3	+5VA	47	+5VA	3/3
		48		
		49		
	GND	50	GND	

= INPUT SIGNAL

= OUTPUT SIGNAL

* = REFER TO THE COMPARISON CHART

VIDEO 4 SCHEMATIC DIAGRAM (1/6)

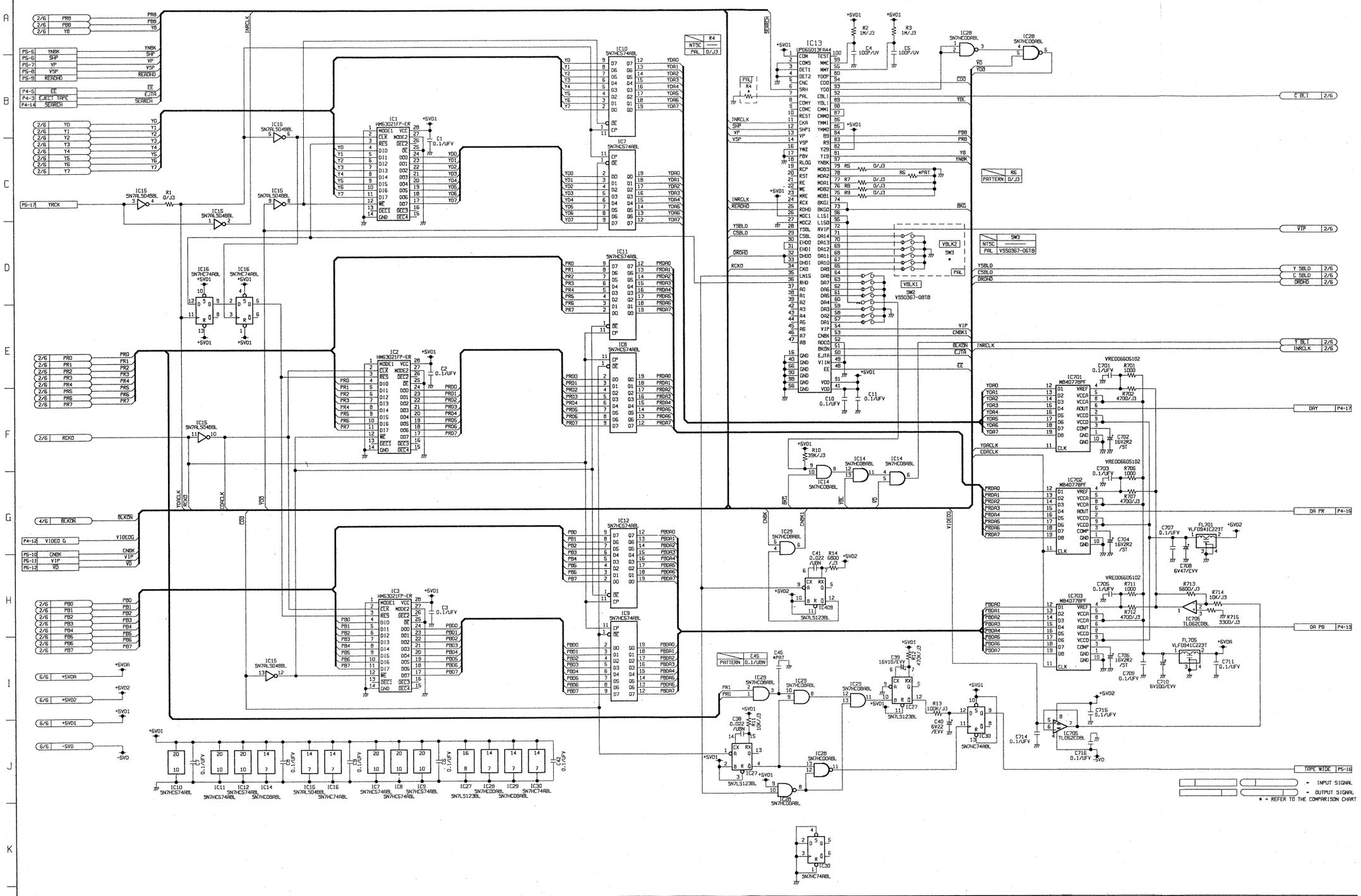

REVERSE SIDE

VIDEO 3 2/3, 3/3

VIDEO 4 SCHEMATIC DIAGRAM (2/6)

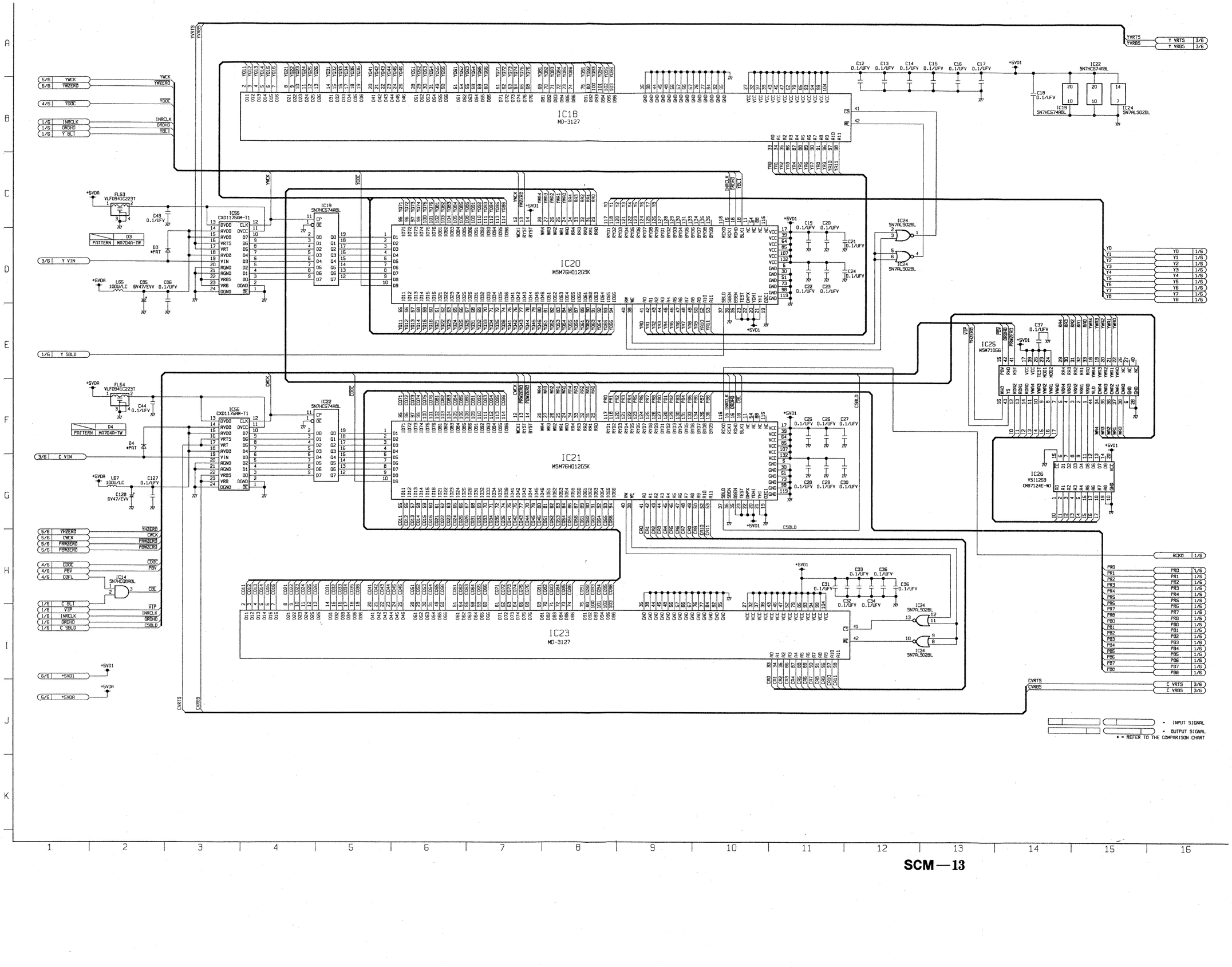

VIDEO 4 SCHEMATIC DIAGRAM (3/6)

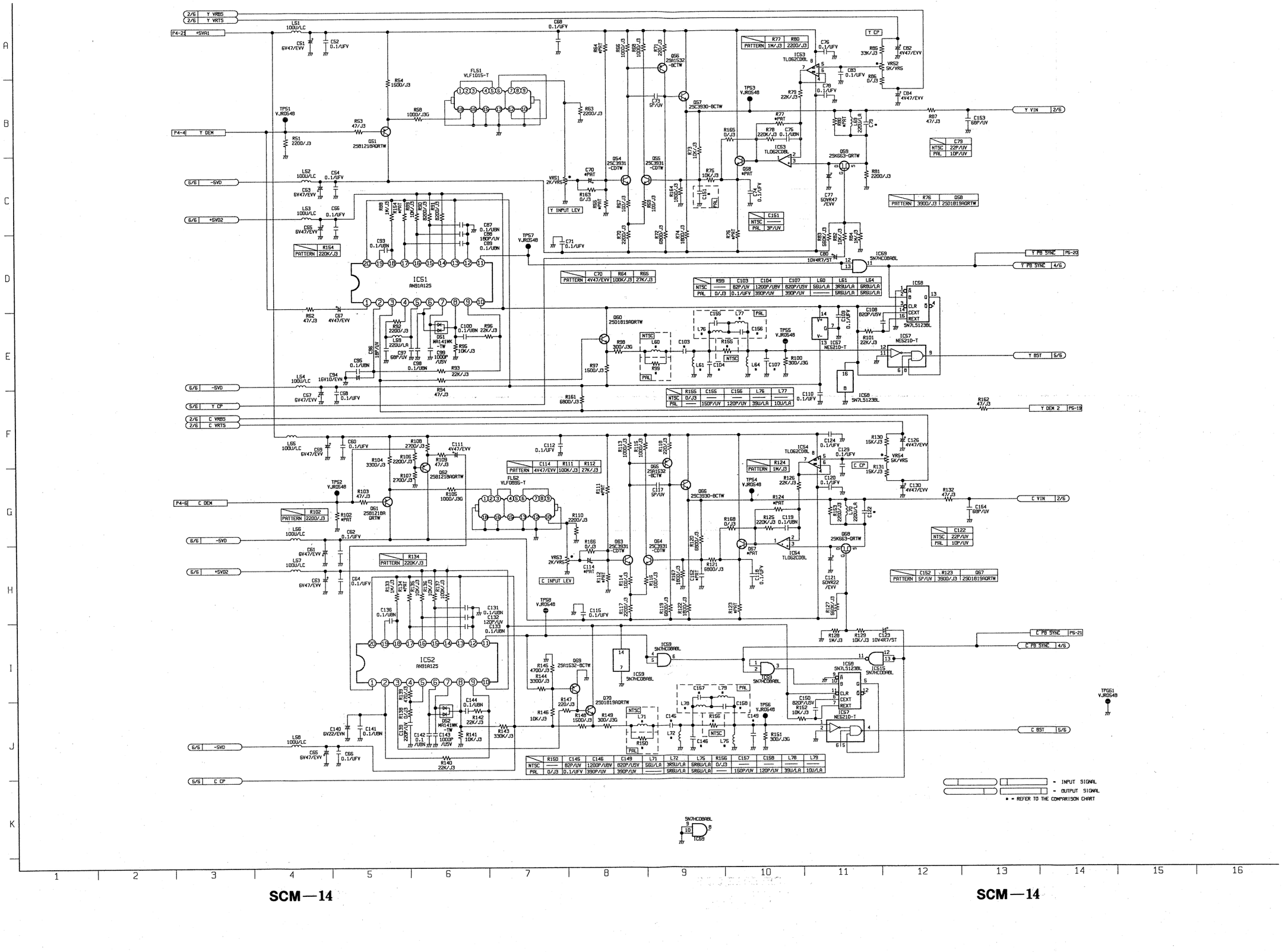

SCM—14

VIDEO 4 SCHEMATIC DIAGRAM (4/6)

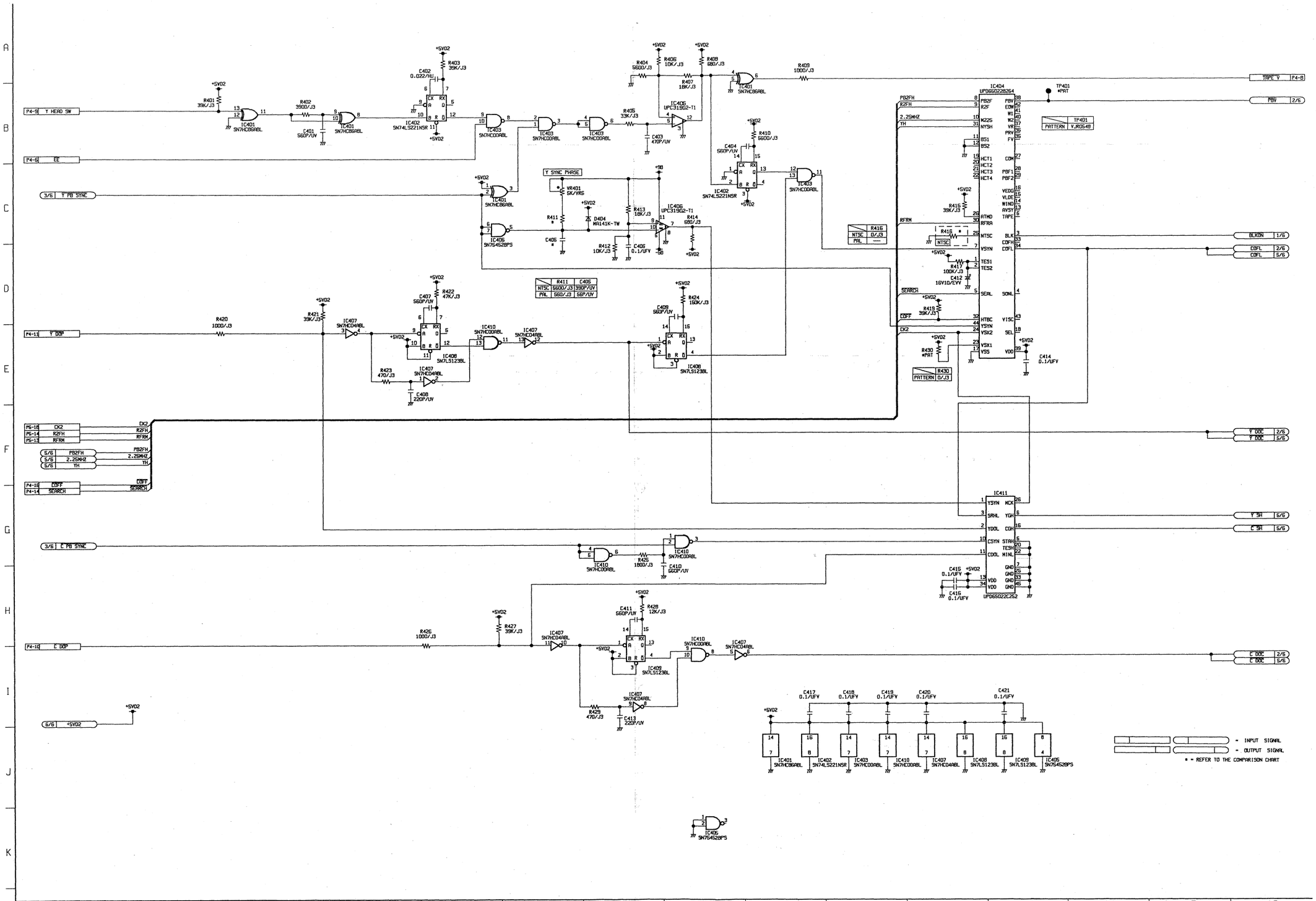

VIDEO 4 SCHEMATIC DIAGRAM (5/6)

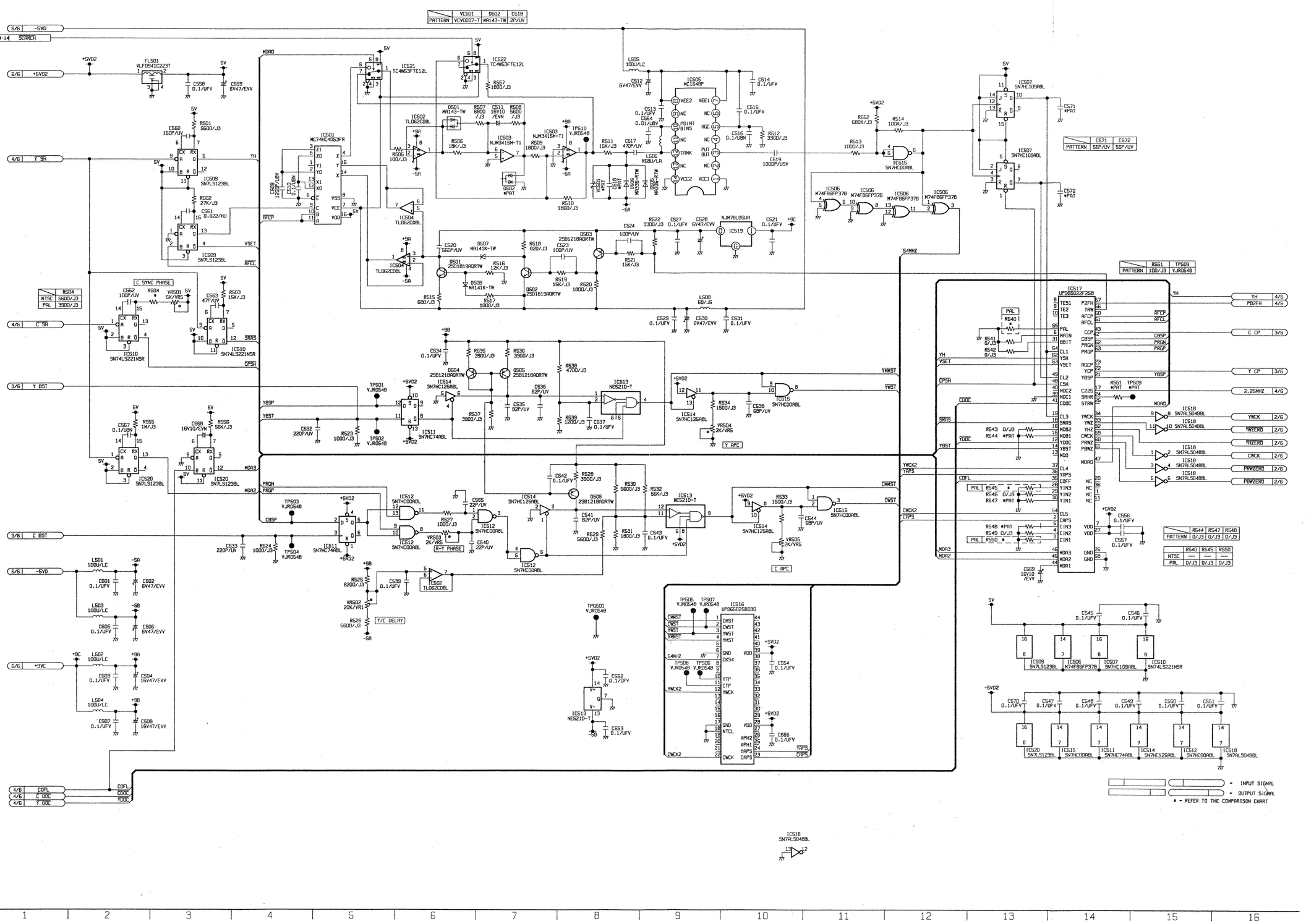

VIDEO 4 SCHEMATIC DIAGRAM (6/6)

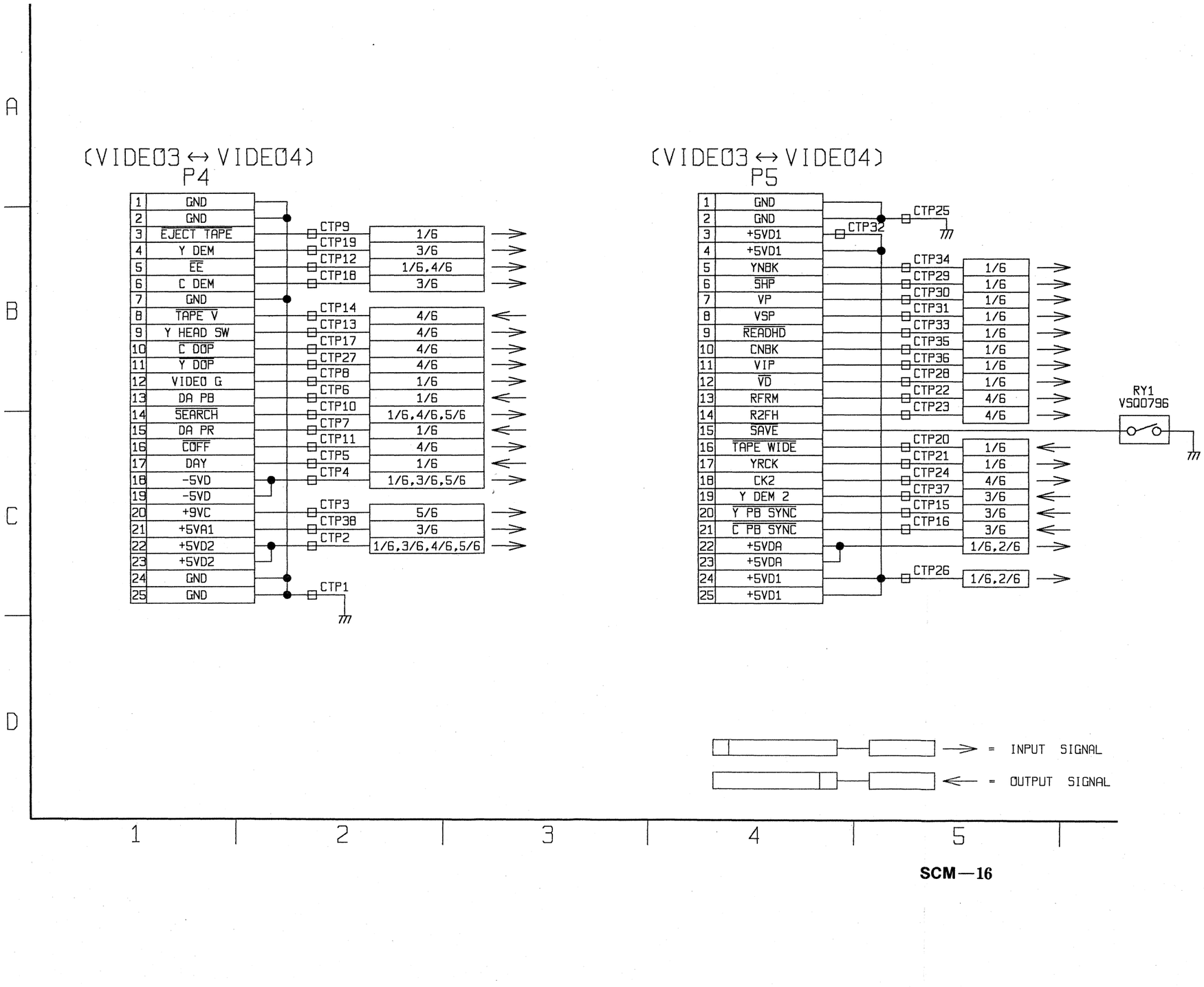

VIDEO MOTHER SCHEMATIC DIAGRAM

AUDIO MOTHER SCHEMATIC DIA

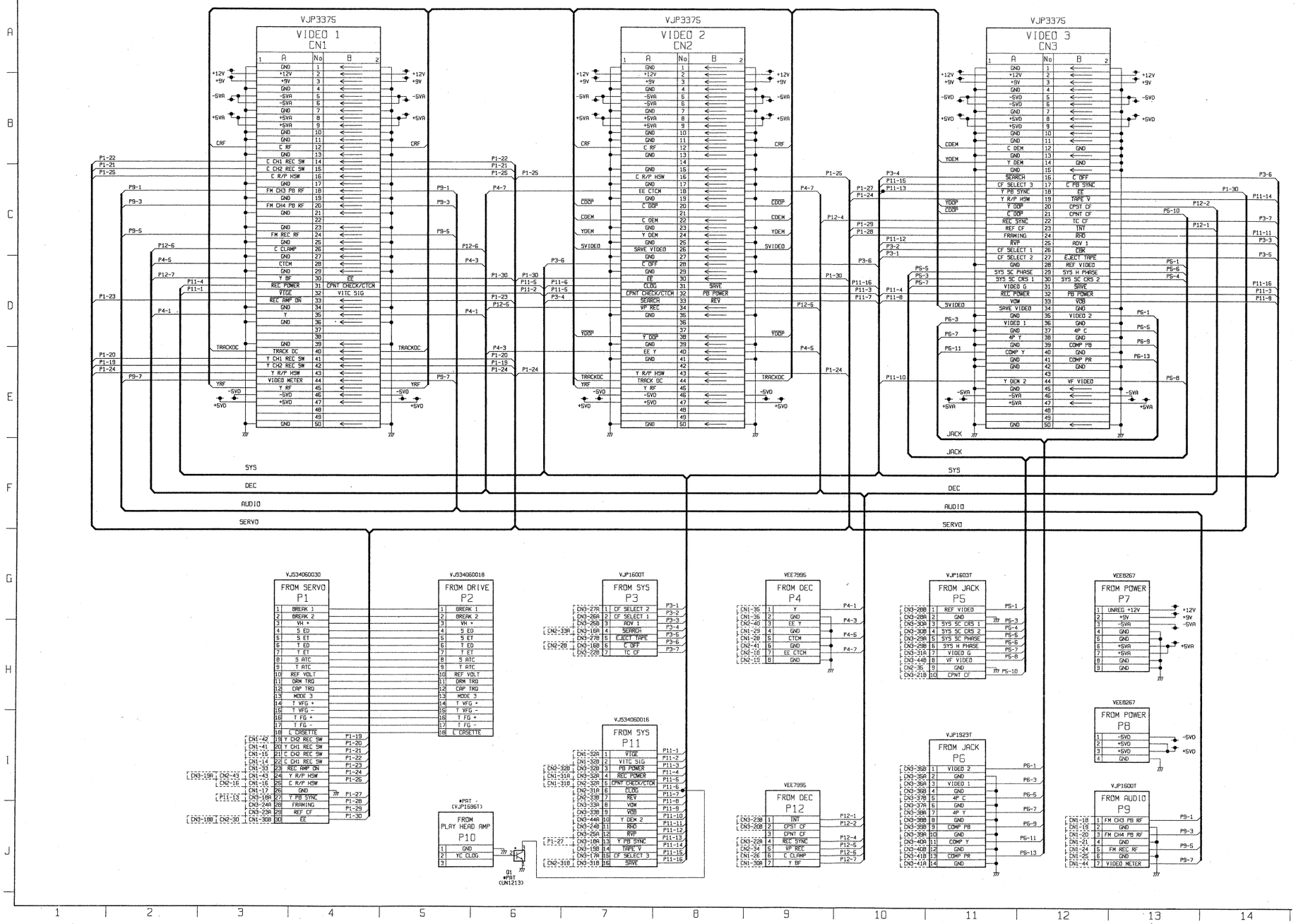

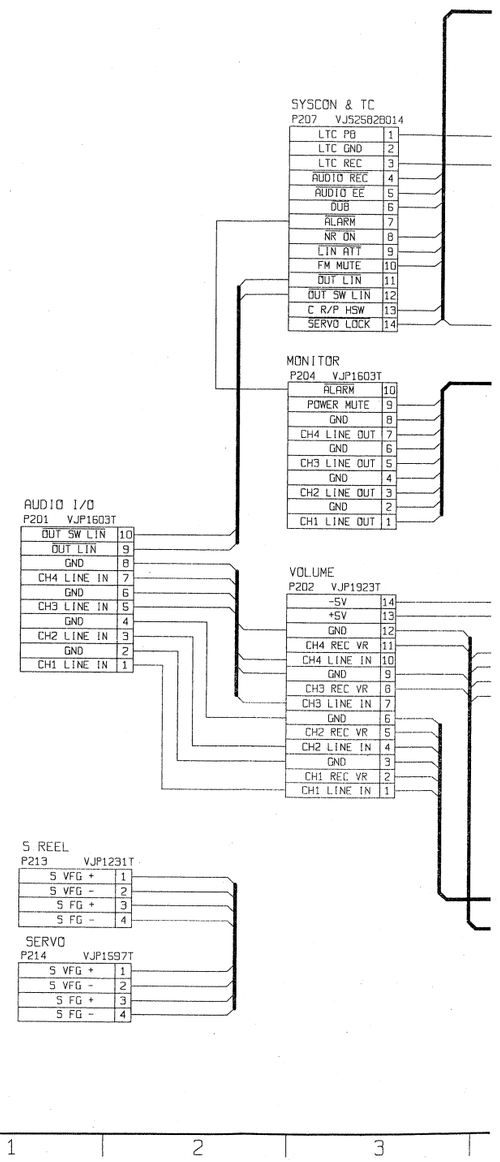

SCM—17

REVERSE SIDE

VIDEO 4 5/6, 6/6

SCHEMATIC DIAGRAM

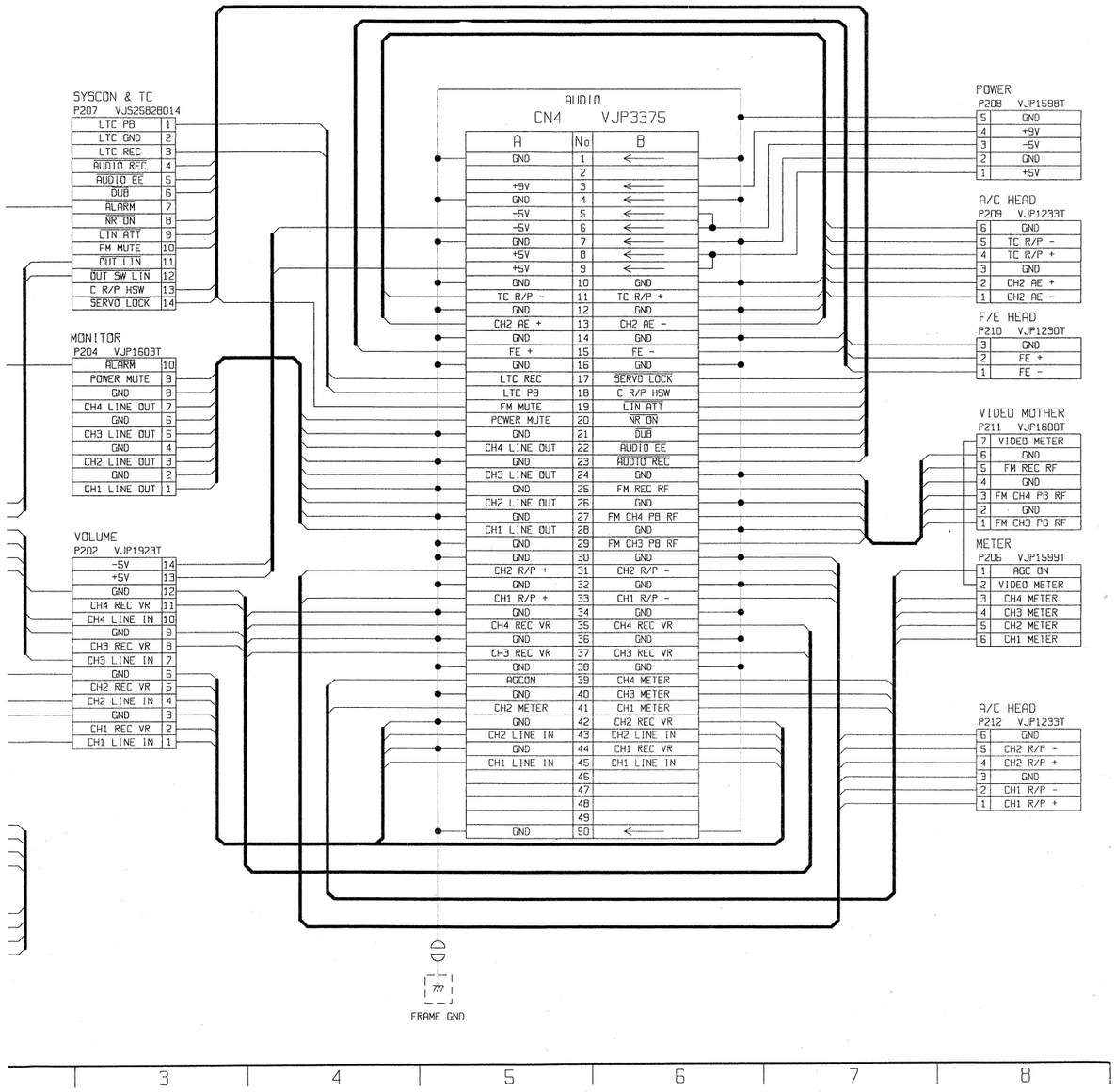

VOLUME SCHEMATIC DIAGRAM

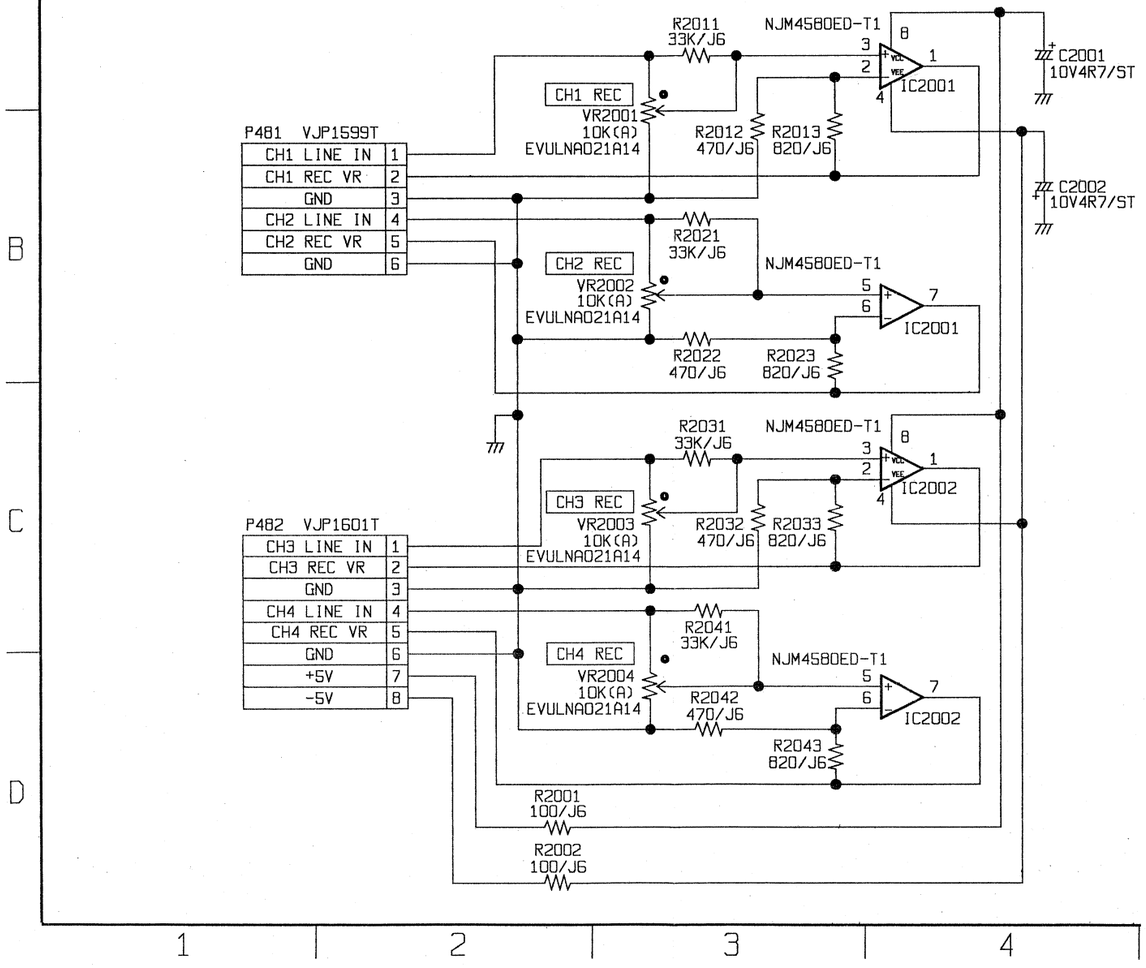

AUDIO I/O SCHEMATIC DIAGRAM

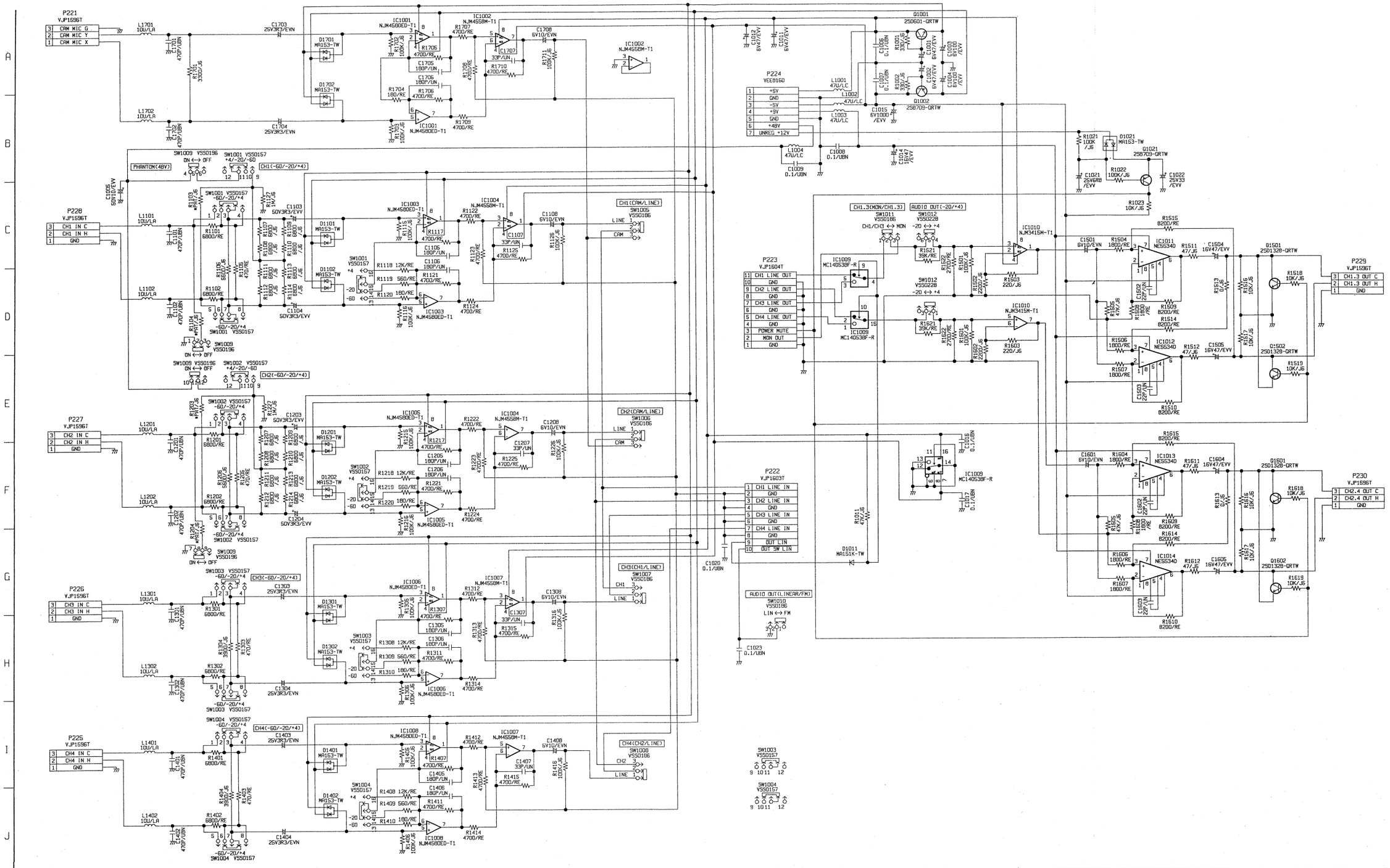

MONITOR VR SCHEMATIC DIAGRAM

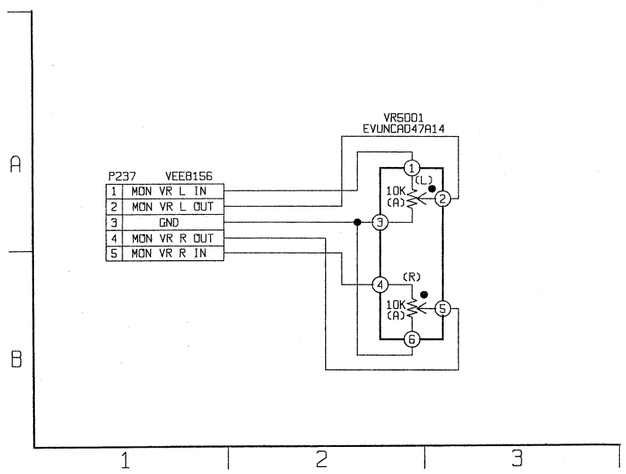

HEADPHONES SCHEMATIC DIAGRAM

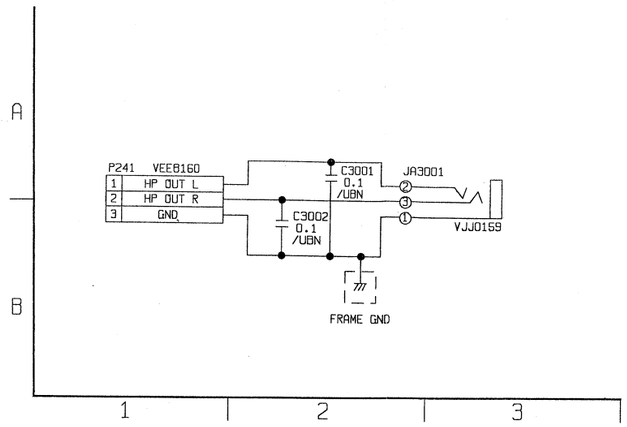

MONITOR SCHEMATIC DIAGRAM

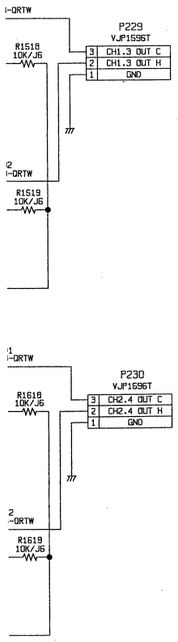

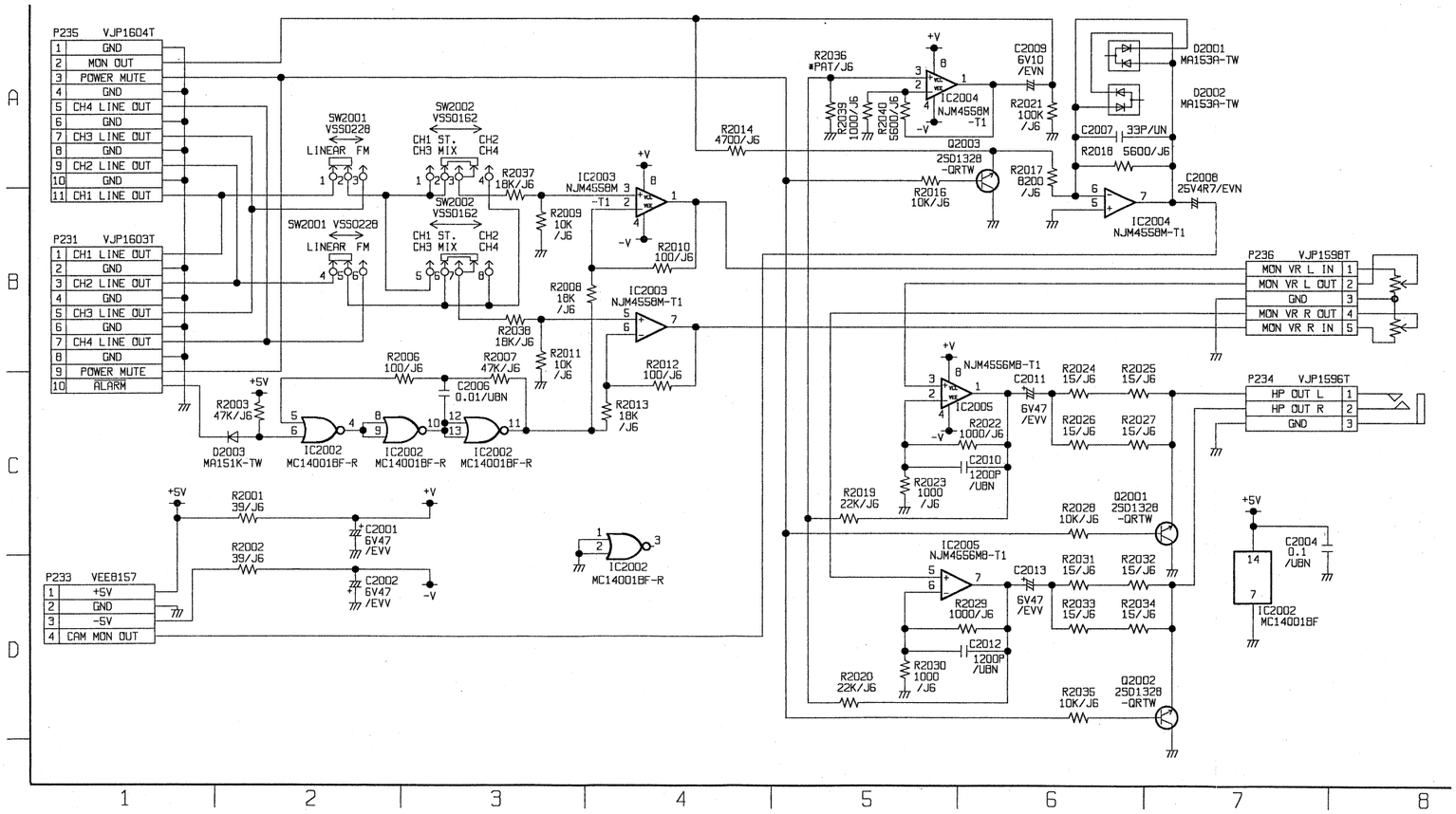

AUDIO SCHEMATIC DIAGRAM (1/3)

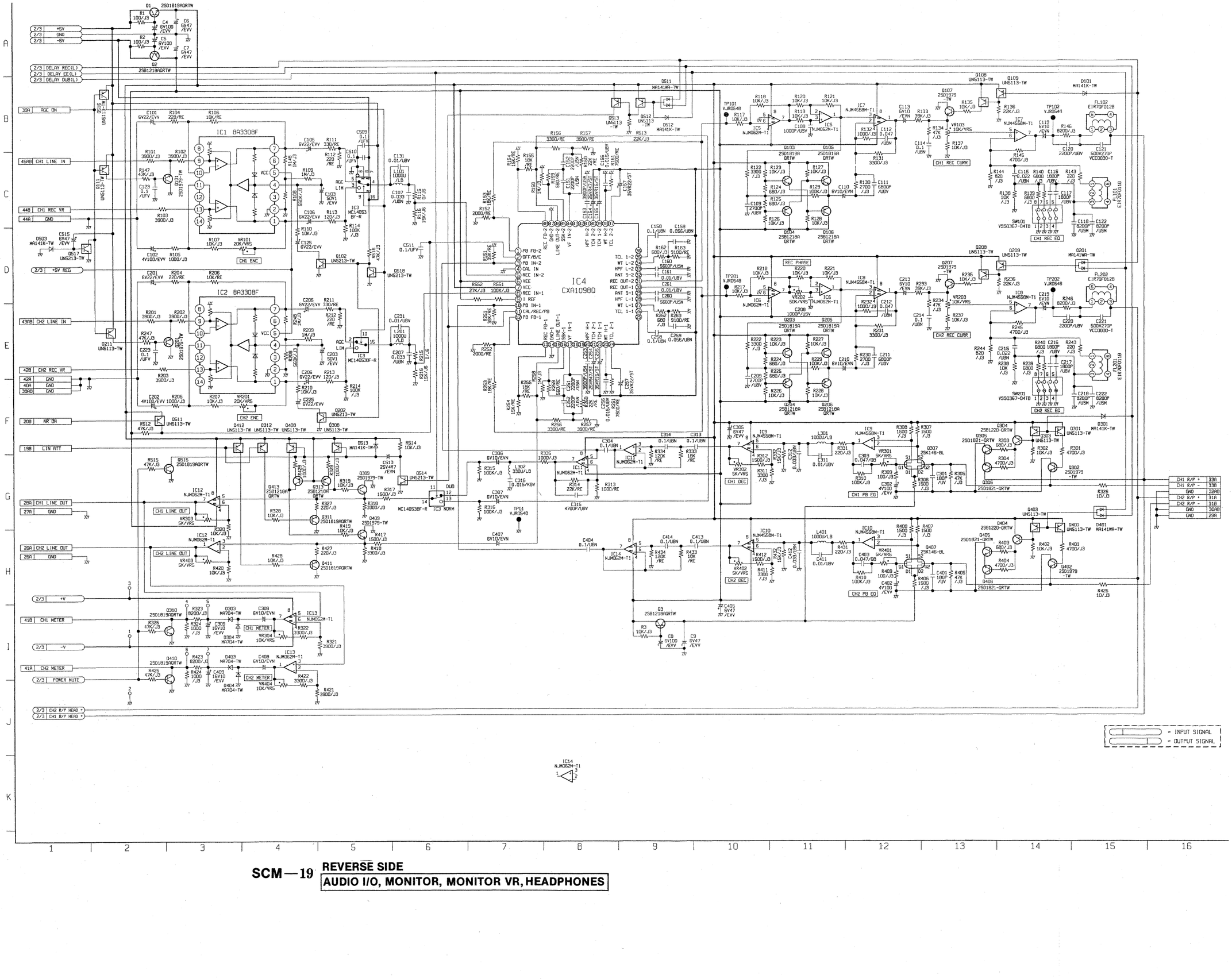

SCM — 19 REVERSE SIDE
AUDIO I/O, MONITOR, MONITOR VR, HEADPHONES

AUDIO SCHEMATIC DIAGRAM (2/3)

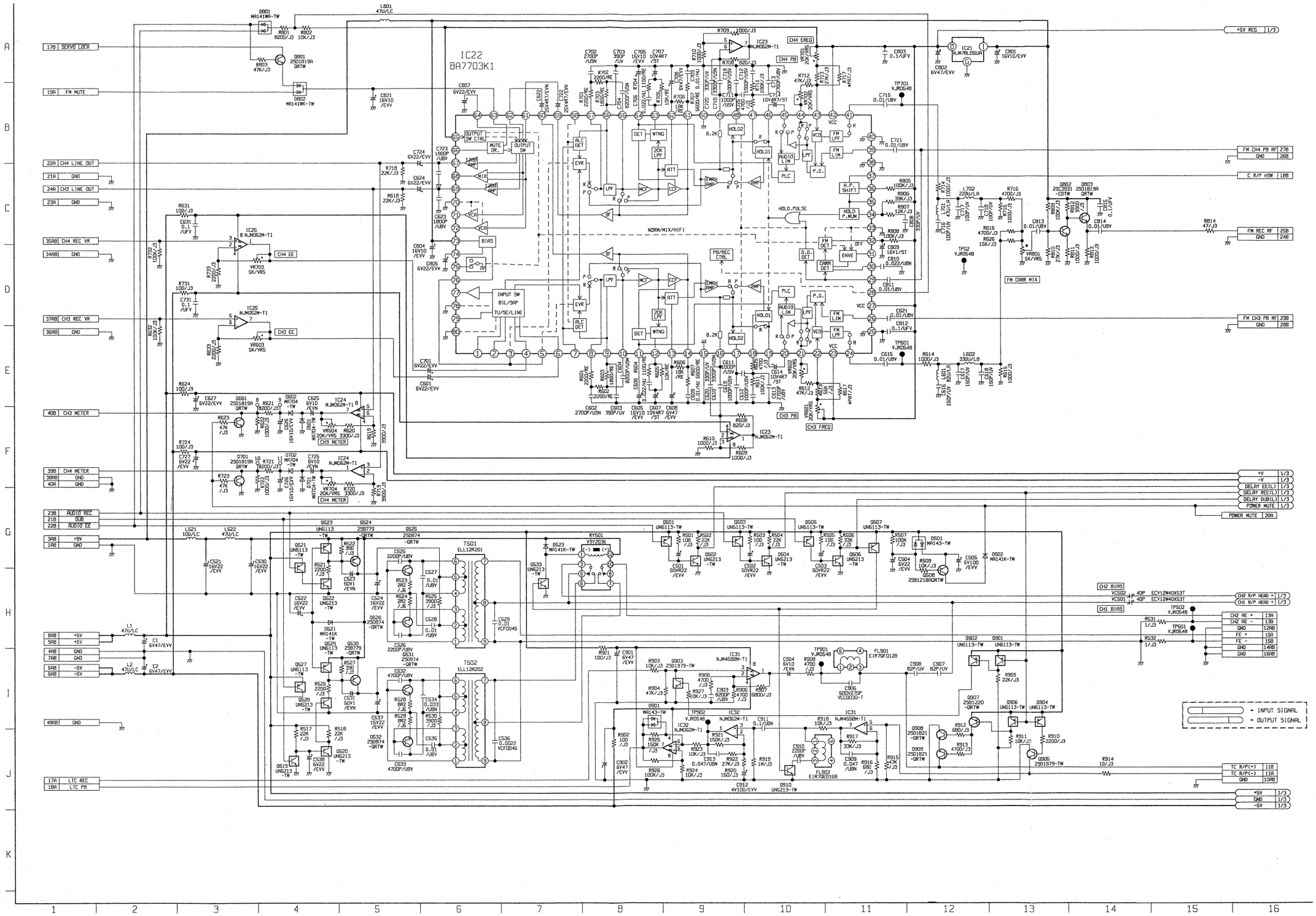

AUDIO SCHEMATIC DIAGRAM (3/3)

CN4 VJS3375

	A	No	B	
2/3	GND	1	←	2/3
		2		
2/3	+9V	3	←	2/3
2/3	GND	4	←	2/3
2/3	-5V	5	←	2/3
2/3	-5V	6	←	2/3
2/3	GND	7	←	2/3
2/3	+5V	8	←	2/3
2/3	+5V	9	←	2/3
2/3	GND	10	GND	2/3
2/3	TC R/P -	11	TC R/P +	2/3
2/3	GND	12	GND	2/3
2/3	CH2 AE +	13	CH2 AE -	2/3
2/3	GND	14	GND	2/3
2/3	FE +	15	FE -	2/3
2/3	GND	16	GND	2/3
2/3	LTC REC	17	$\overline{\text{SERVO LOCK}}$	2/3
2/3	LTC PB	18	C R/P HSW	2/3
1/3	FM MUTE	19	$\overline{\text{LIN ATT}}$	1/3
2/3	POWET MUTE	20	$\overline{\text{NR ON}}$	2/3
2/3	GND	21	$\overline{\text{DUB}}$	2/3
2/3	CH4 LINE OUT	22	$\overline{\text{AUDIO EE}}$	2/3
2/3	GND	23	$\overline{\text{AUDIO REC}}$	2/3
2/3	CH3 LINE OUT	24	GND	2/3
1/3	GND	25	FM REC RF	2/3
1/3	CH2 LINE OUT	26	GND	2/3
1/3	GND	27	CH4 PB RF	2/3
1/3	CH1 LINE OUT	28	GND	2/3
1/3	GND	29	CH3 PB RF	1/3
1/3	GND	30	GND	1/3
1/3	CH2 R/P +	31	CH2 R/P -	1/3
1/3	GND	32	GND	1/3
1/3	CH1 R/P +	33	CH1 R/P -	1/3
1/3	GND	34	GND	1/3
2/3	CH4 REC VR	35	CH4 REC VR	2/3
2/3	GND	36	GND	2/3
2/3	CH3 REC VR	37	CH3 REC VR	2/3
2/3	GND	38	GND	2/3
1/3	AGC ON	39	CH4 METER	2/3
1/3	GND	40	CH3 METER	2/3
1/3	CH2 METER	41	CH1 METER	1/3
1/3	GND	42	CH2 REC VR	1/3
1/3	CH2 LINE IN	43	CH2 LINE IN	1/3
1/3	GND	44	CH1 REC VR	1/3
1/3	CH1 LINE IN	45	CH1 LINE IN	1/3
		46		
		47		
		48		
		49		
2/3	GND	50	GND	2/3

METER SELECT SCHEMATIC DIAGRAM

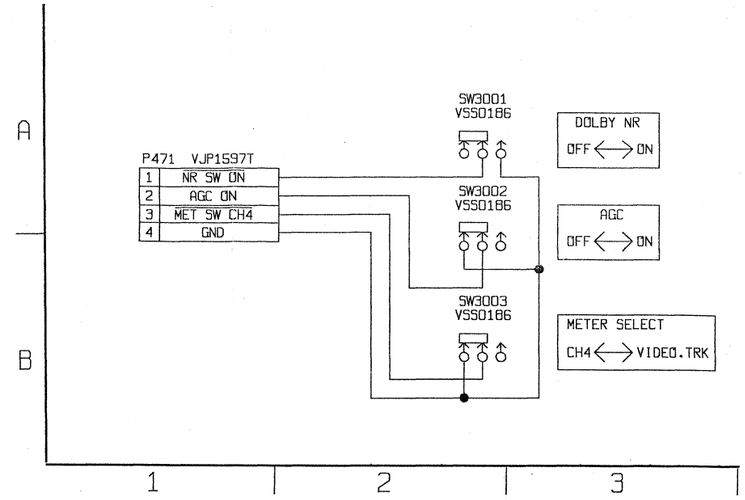

METER SCHEMATIC DIAGRAM

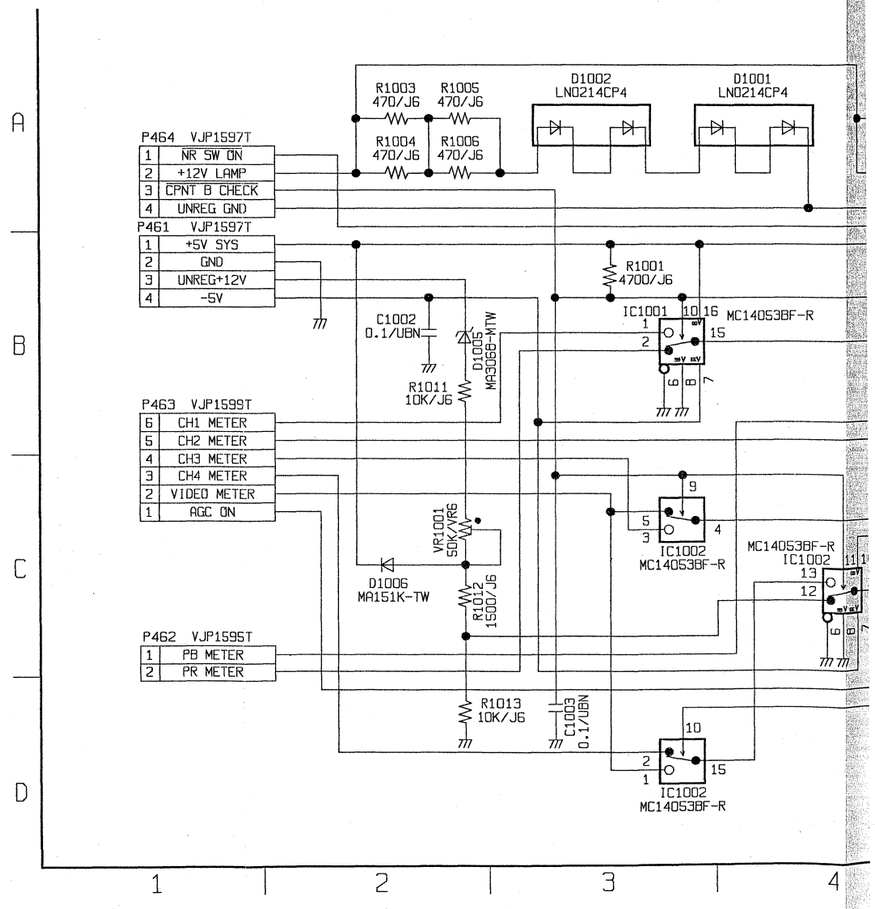

METER SELECT SCHEMATIC DIAGRAM

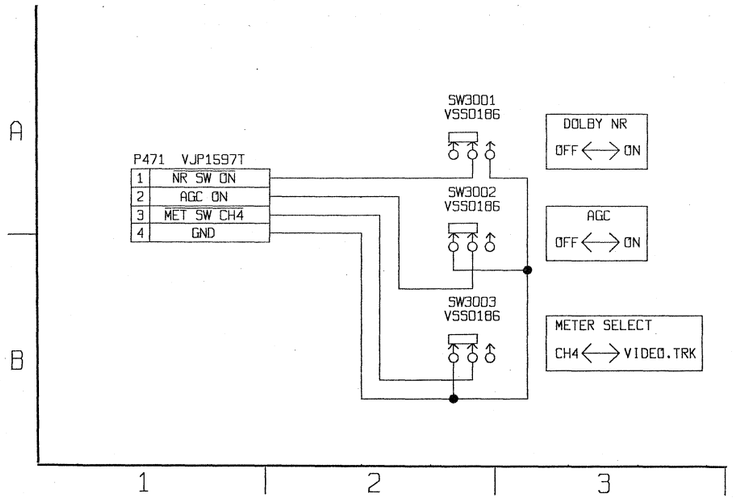

METER SCHEMATIC DIAGRAM

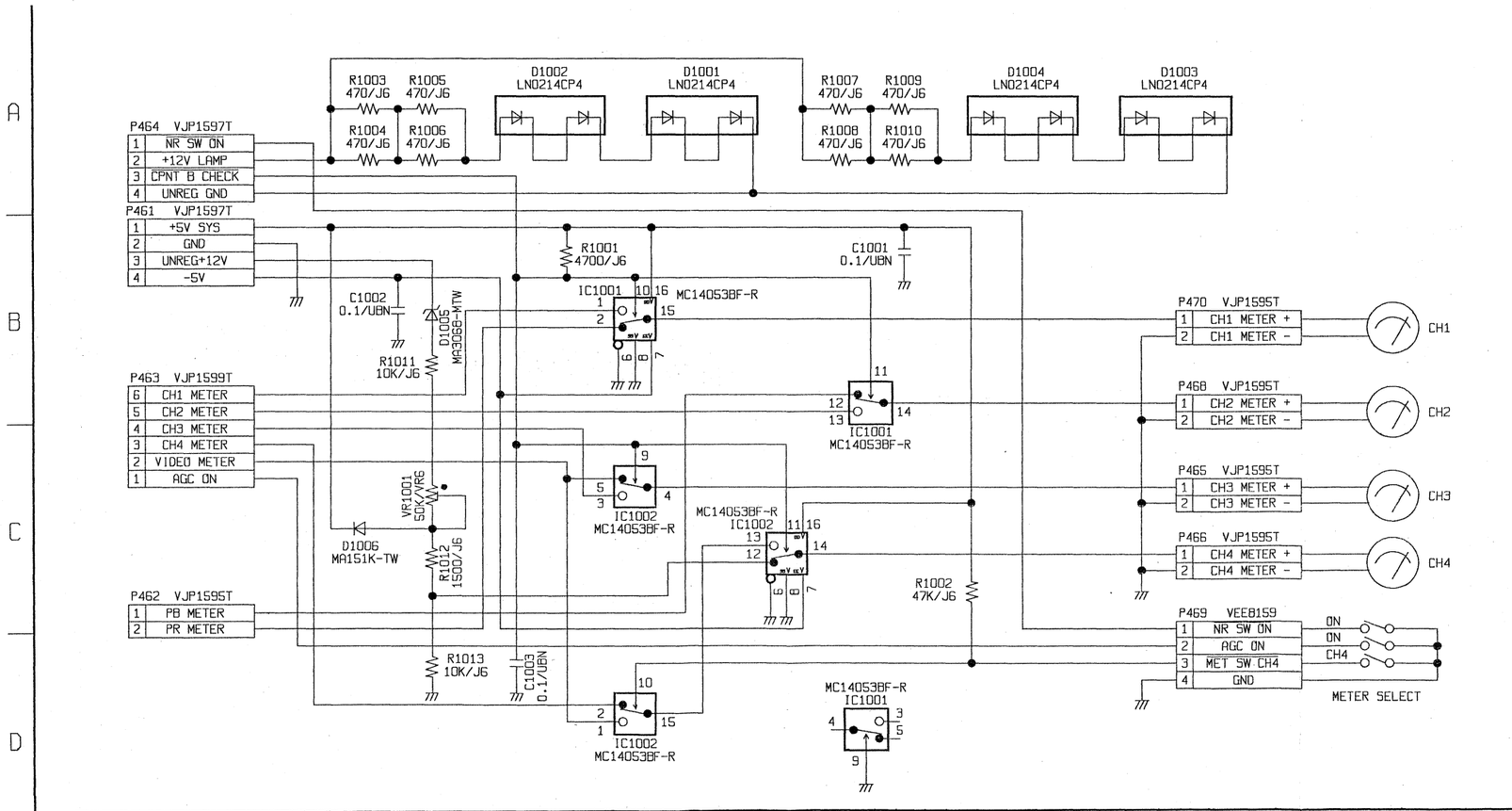

REVERSE SIDE
SERVO 1/2

COMPARISON CHART OF NTSC MODEL AND PAL MODEL

REF	NTSC	PAL
C38	0.15/UBN	0.18/UBM
C39	0.1/UBN	0.12/UBN
C40	0.12/UBN	0.15/UBN
C87	0.22/UBM	0.27/UBM
C91	*PAT/UV	22P/UV
C92	*PAT/UV	22P/UV
D17	*PAT	*PAT
IC45	*PAT	MC14013BF-R
IC24	*PAT	*PAT
IC26	*PAT	*PAT
P511	*PAT	*PAT
Q9	*PAT	*PAT
R100	22K/J3	33K/J3
R113	4700/RE	18K/RE
R114	22K/RE	47K/RE
R115	10K/RE	27K/RE
R116	15K/RE	27K/RE
R119	*PAT/J3	*PAT/J3
R123	*PAT/J3	*PAT/J3
R124	*PAT/J3	*PAT/J3
R140	82K/J3	22K/J3
R149	6800/J3	4700/J3
R153	100K/J3	150K/J3
R161	*PAT/J3	*PAT/J3
R170	*PAT/J3	270/J3
R171	*PAT/J3	1M/J3
R173	0/J3	*PAT/J3
R175	*PAT/J3	0/J3
R182	*PAT/J3	*PAT/J3
R48	470K/J3	560K/J3
R82	39K/J3	8200/J3
VR1	50K	100K
W3	0/J3	*PAT/J3
W4	*PAT/J3	0/J3
W5	0/J3	*PAT/J3
W6	0/J3	*PAT/J3
X1	VSX0086	VSX0126
X2	*PAT	VSX0086

SERVO SCHEMATIC DIAGRAM (1/2)

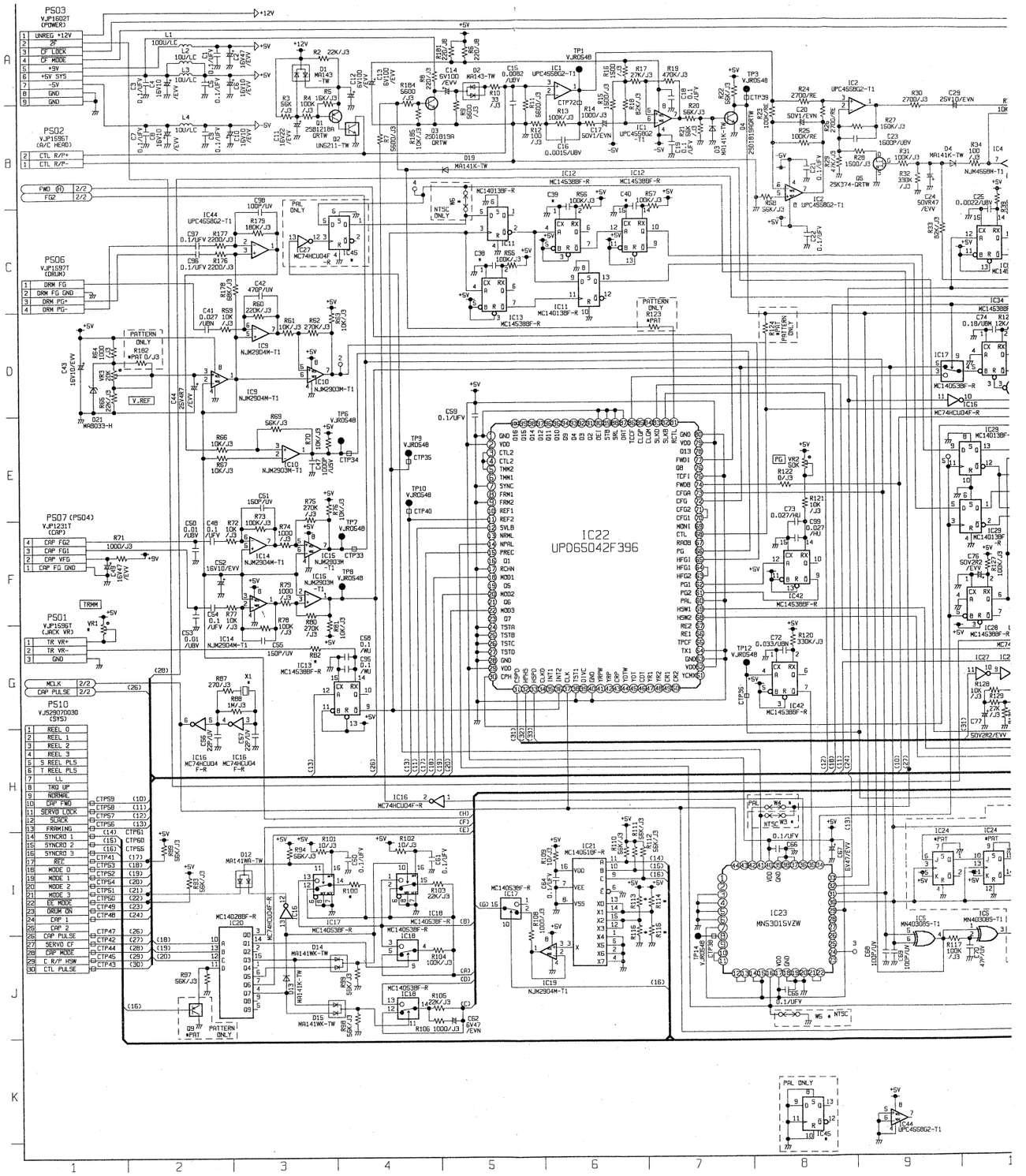

SERVO SCHEMATIC DIAGRAM (1/2)

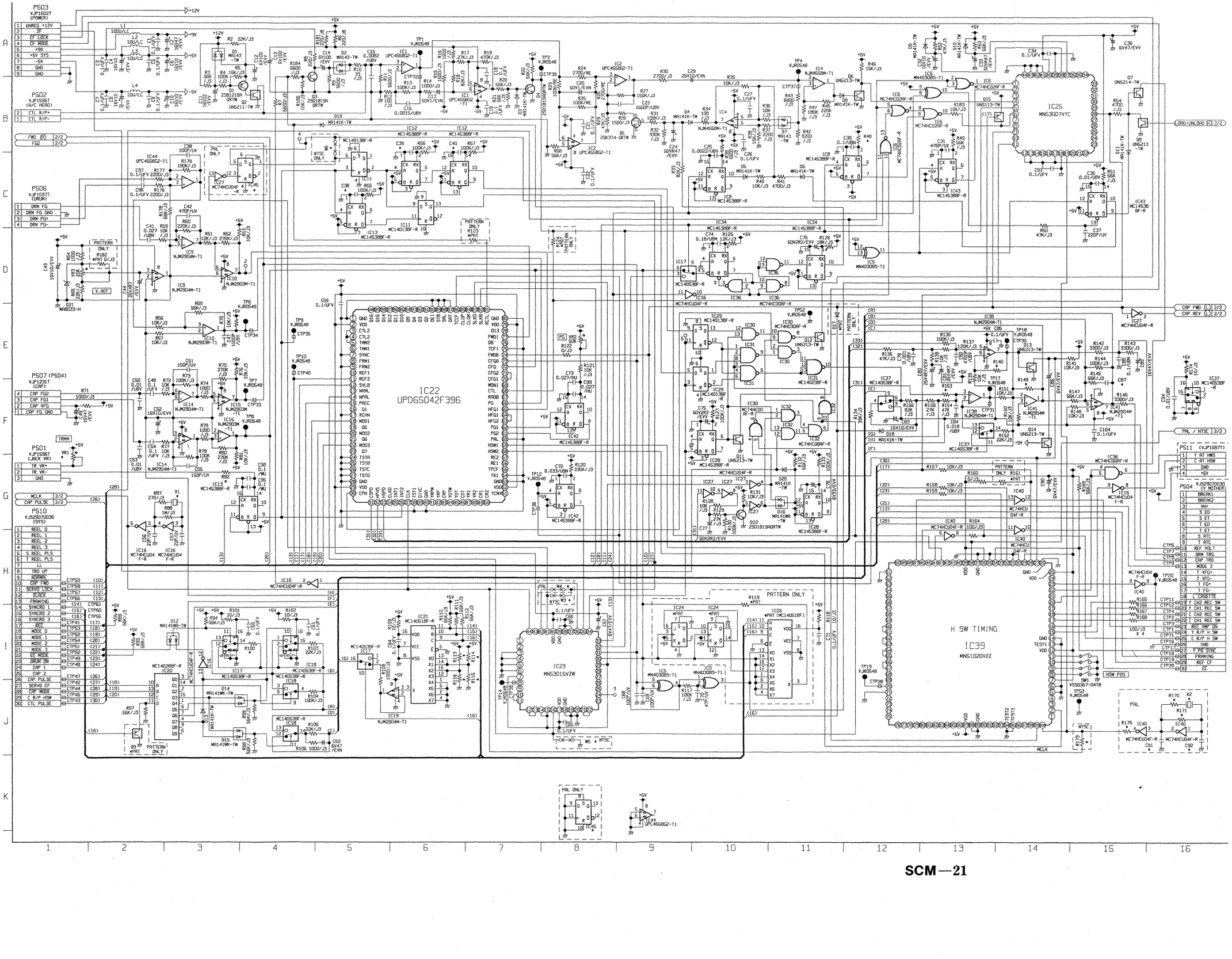

SERVO SCHEMATIC DIAGRAM (2/2)

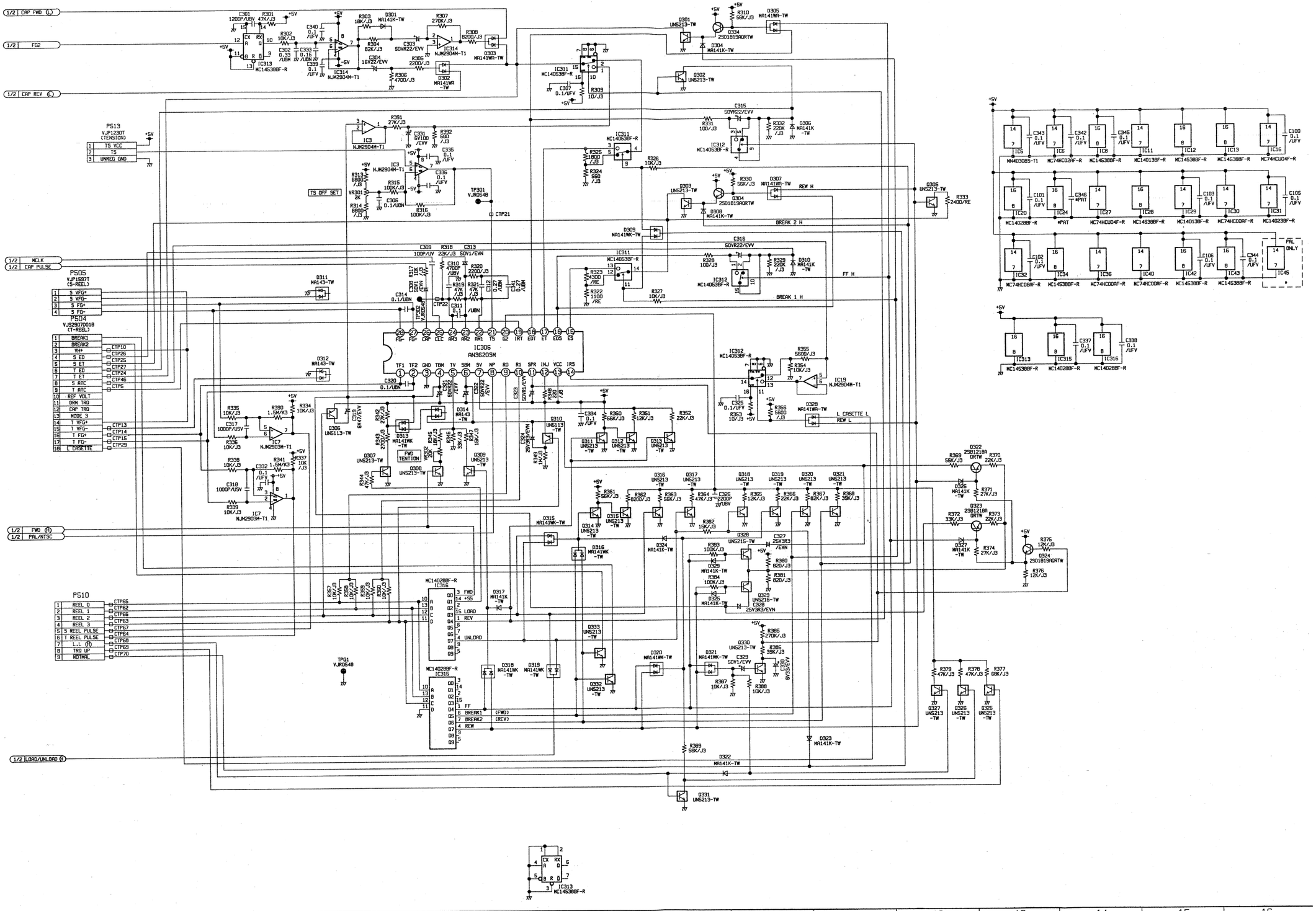

SYSTEM CONTROL & TC SCHEMATIC DIAGRAM (1/5)

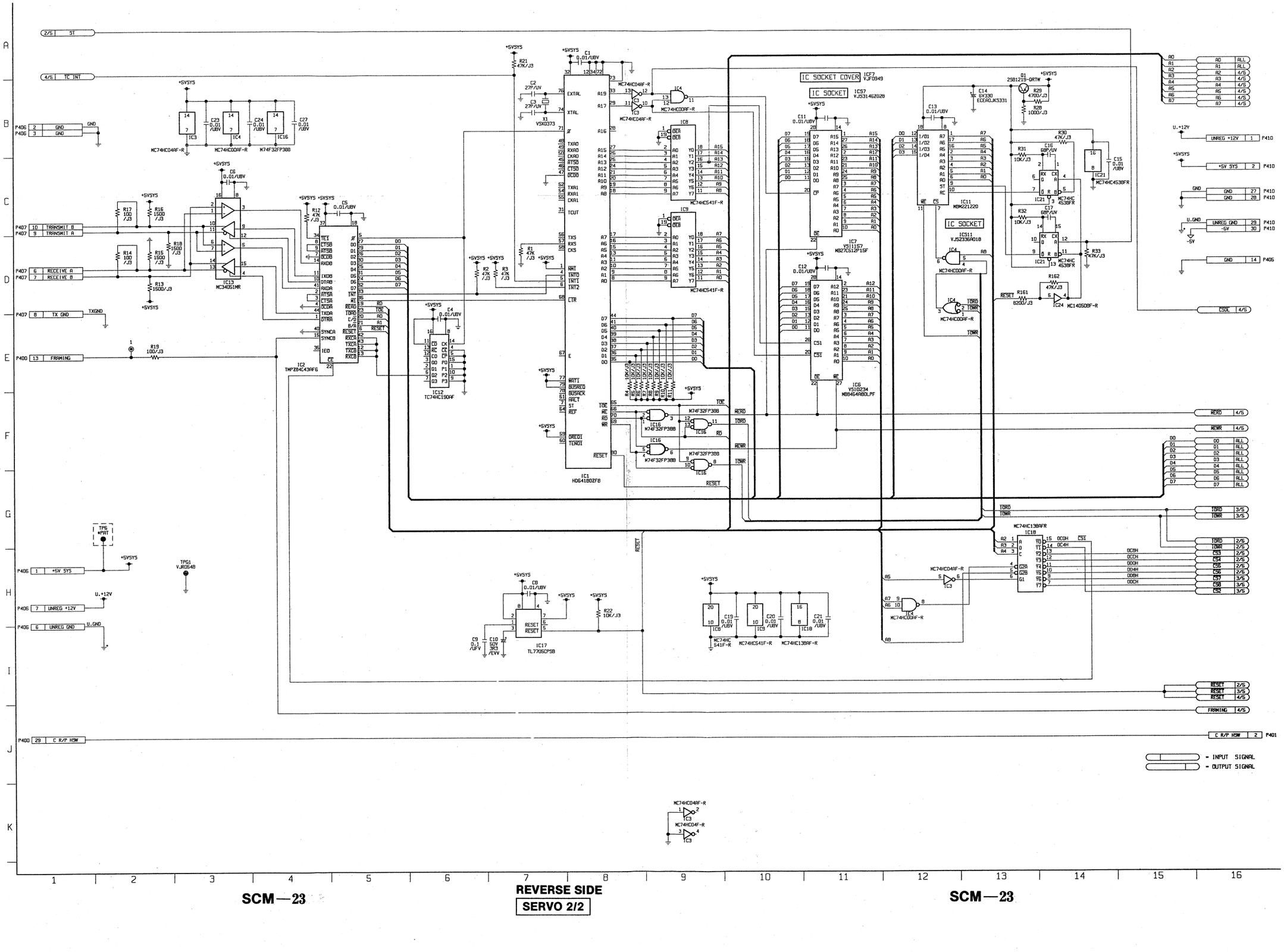

SYSTEM CONTROL & TC SCHEMATIC DIAGRAM (2/5)

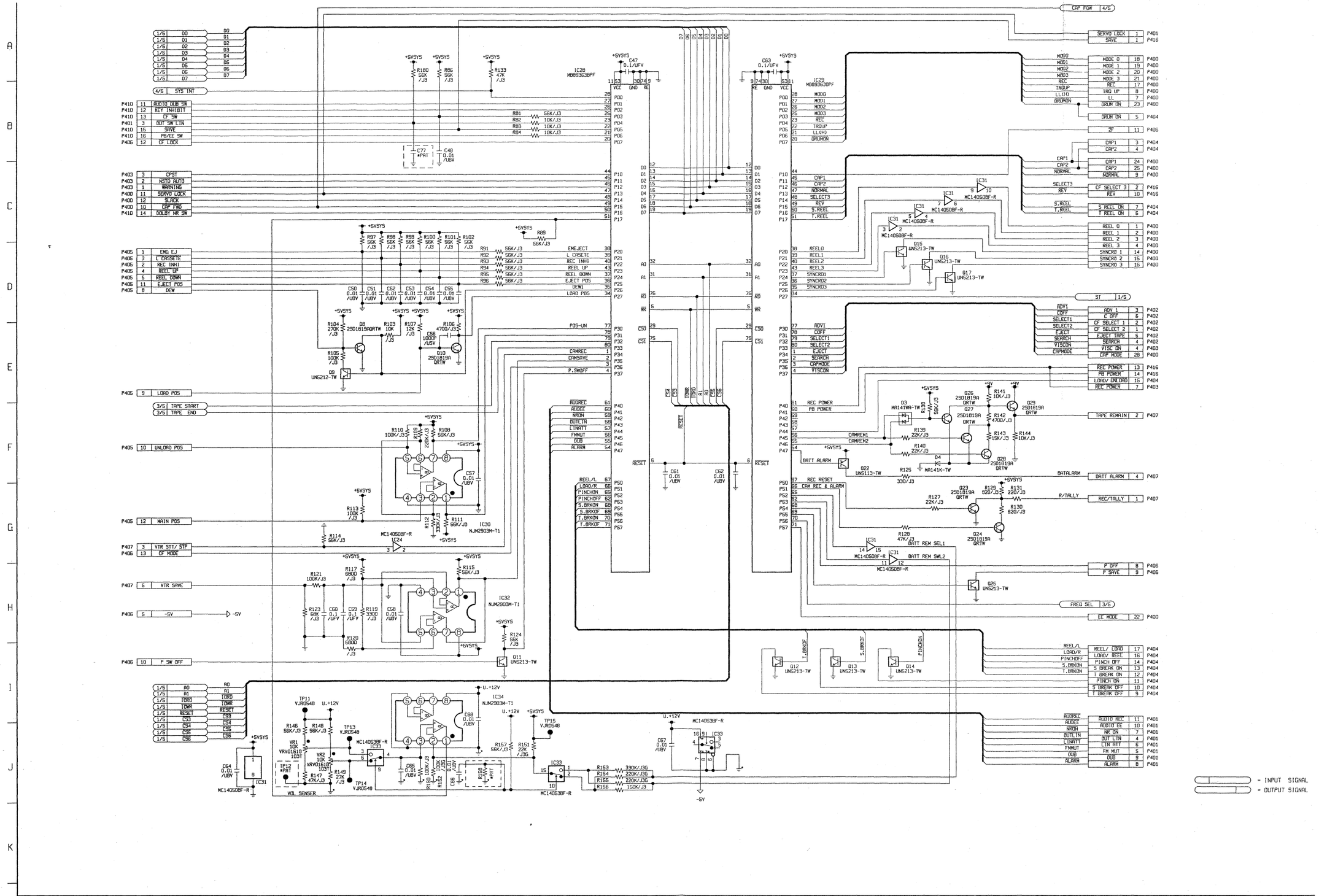

SYSTEM CONTROL & TC SCHEMATIC DIAGRAM (3/5)

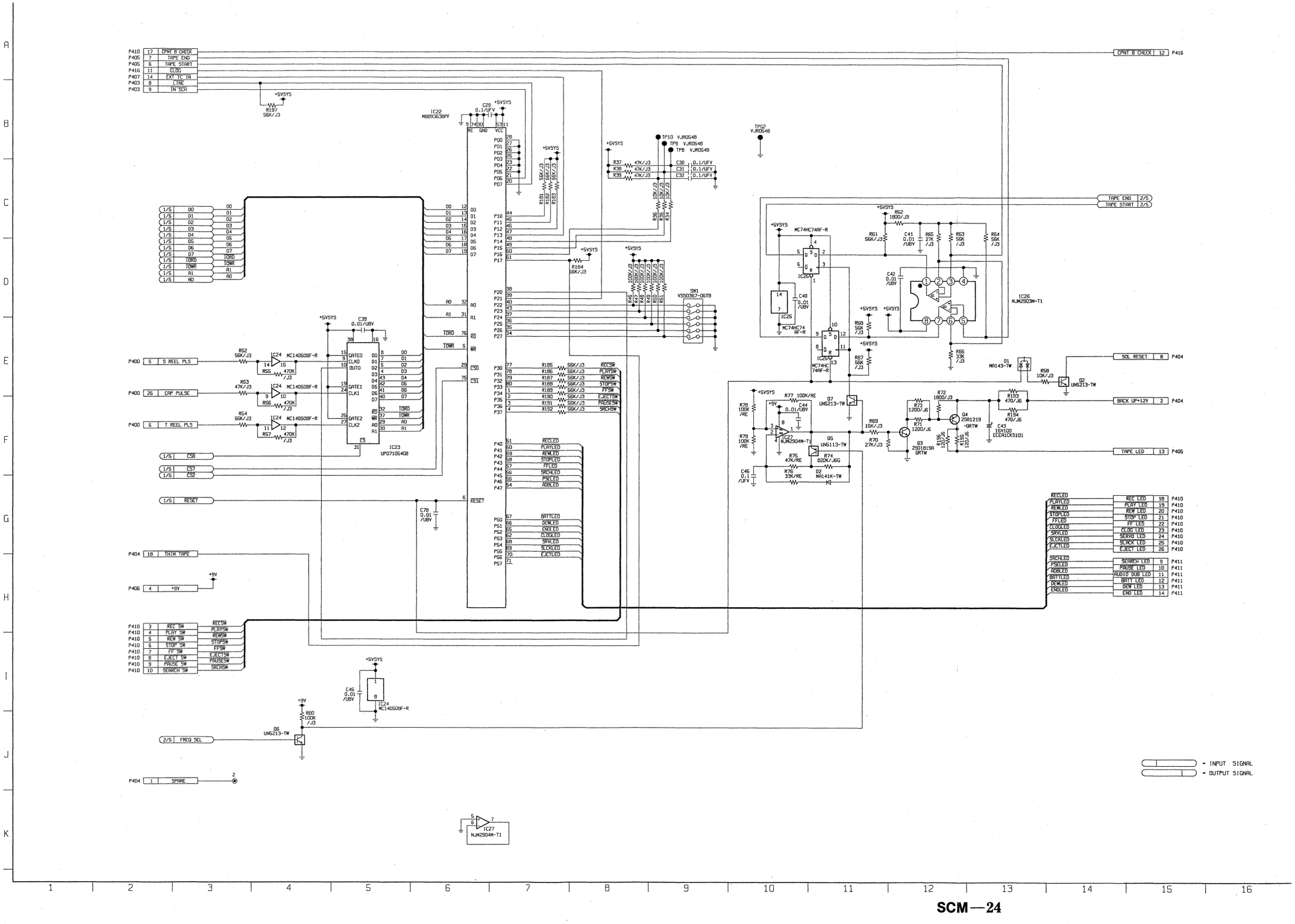

16

SYSTEM CONTROL & TC SCHEMATIC DIAGRAM (4/5)

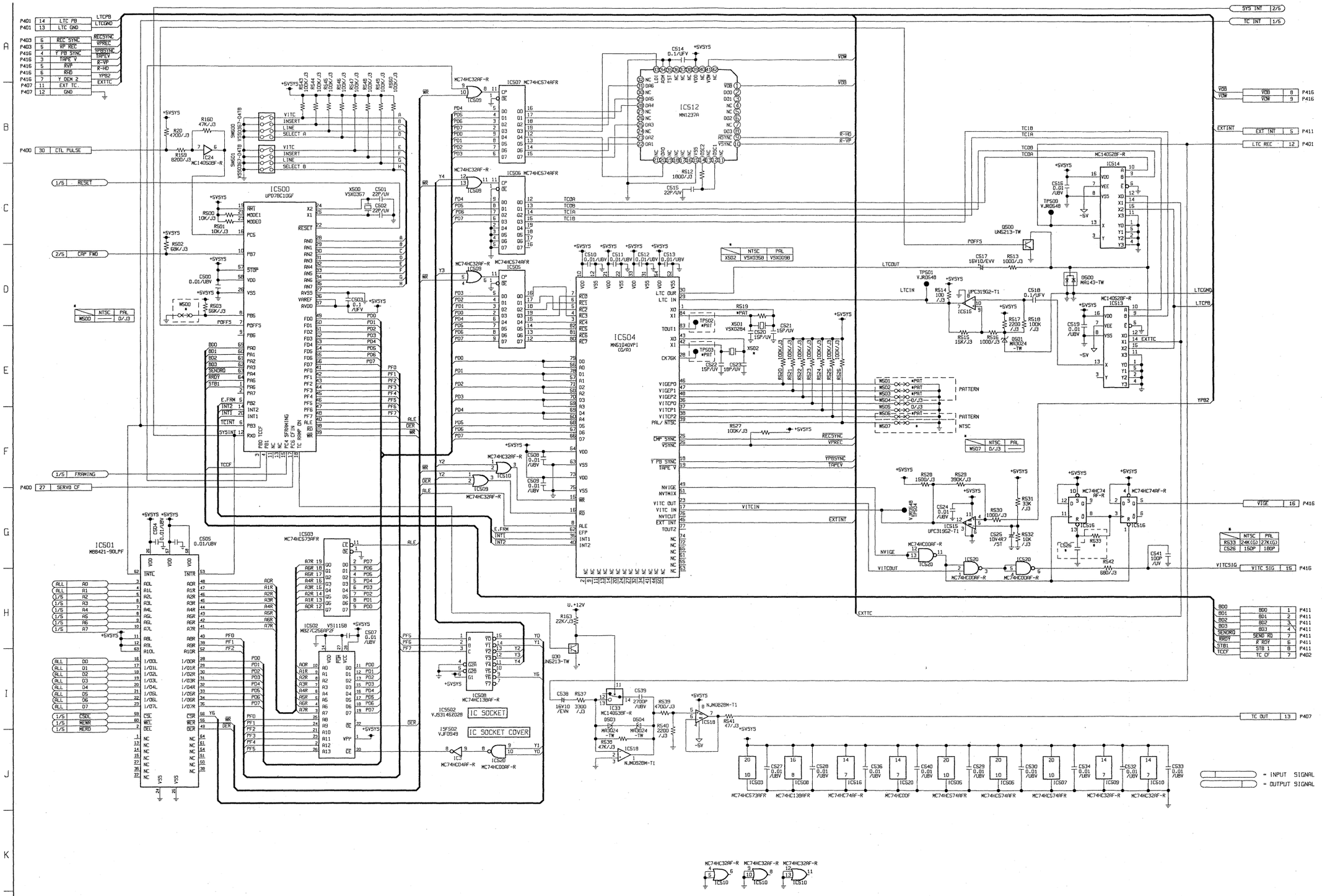

REVERSE SIDE

SYSTEM CONTROL & TC 2/5, 3/5

SYSTEM CONTROL & TC SCHEMATIC DIAGRAM (5/5)

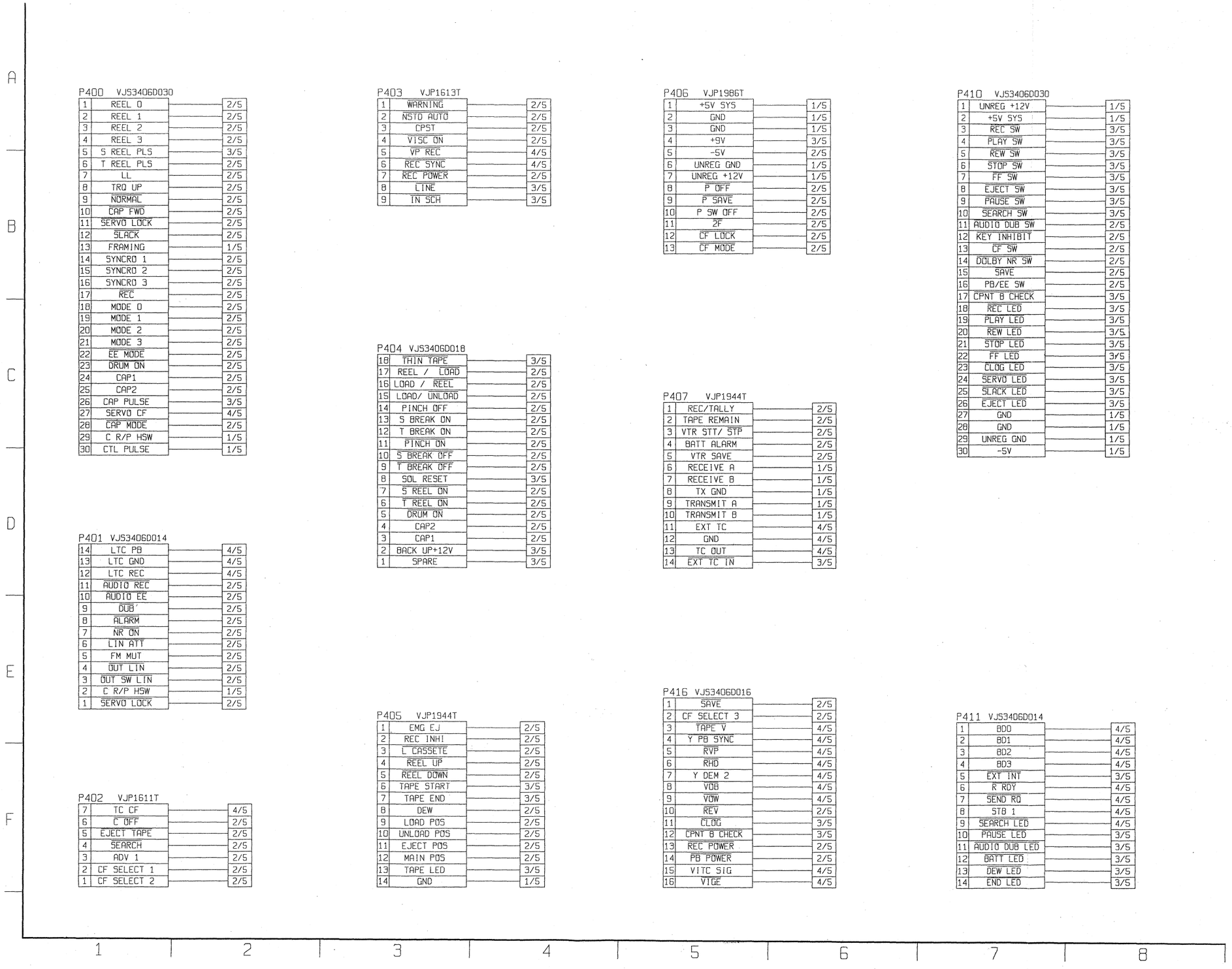

DRIVER SCHEMATIC DIAGRAM (1/2)

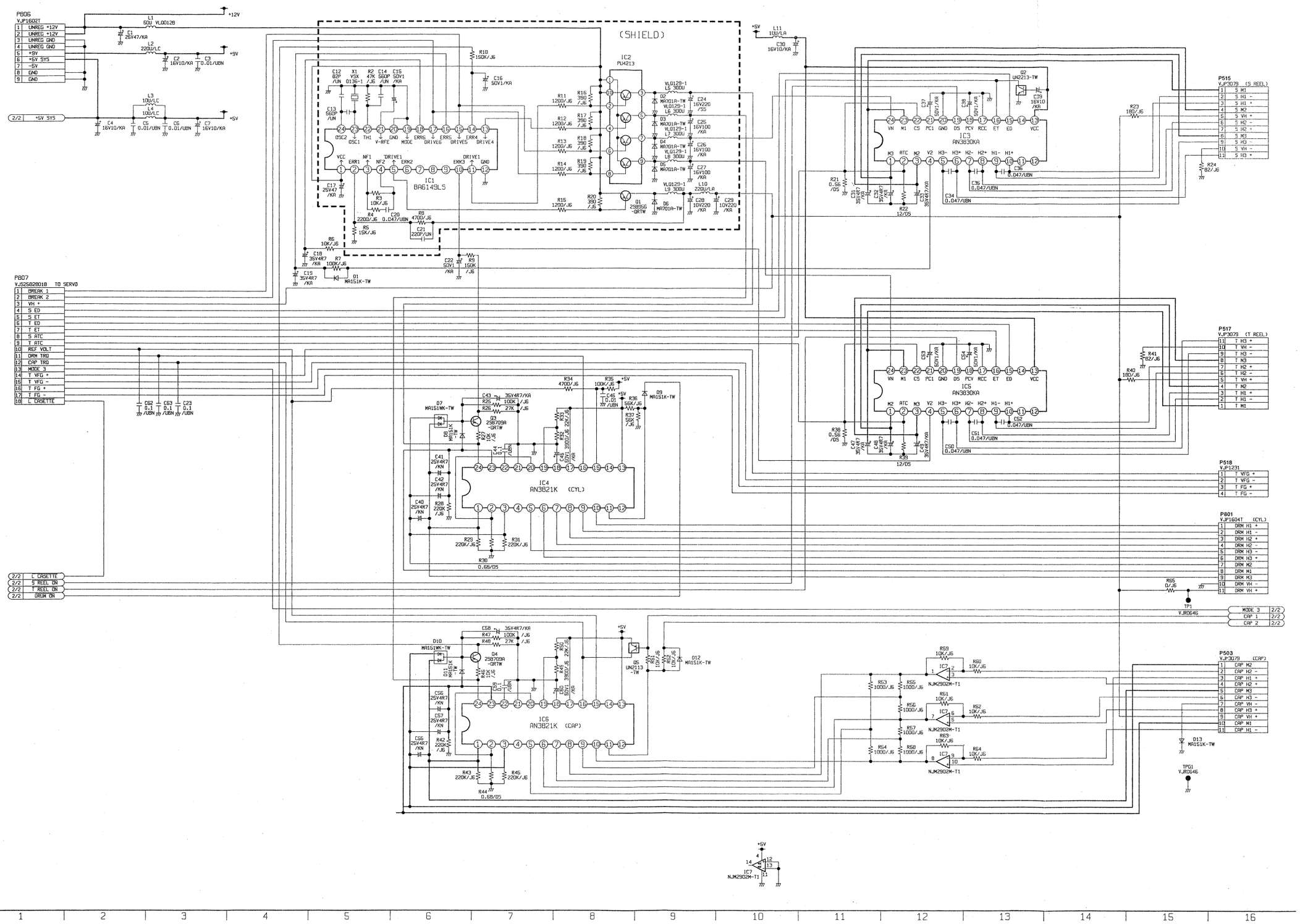

DRIVER SCHEMATIC DIAGRAM (2/2)

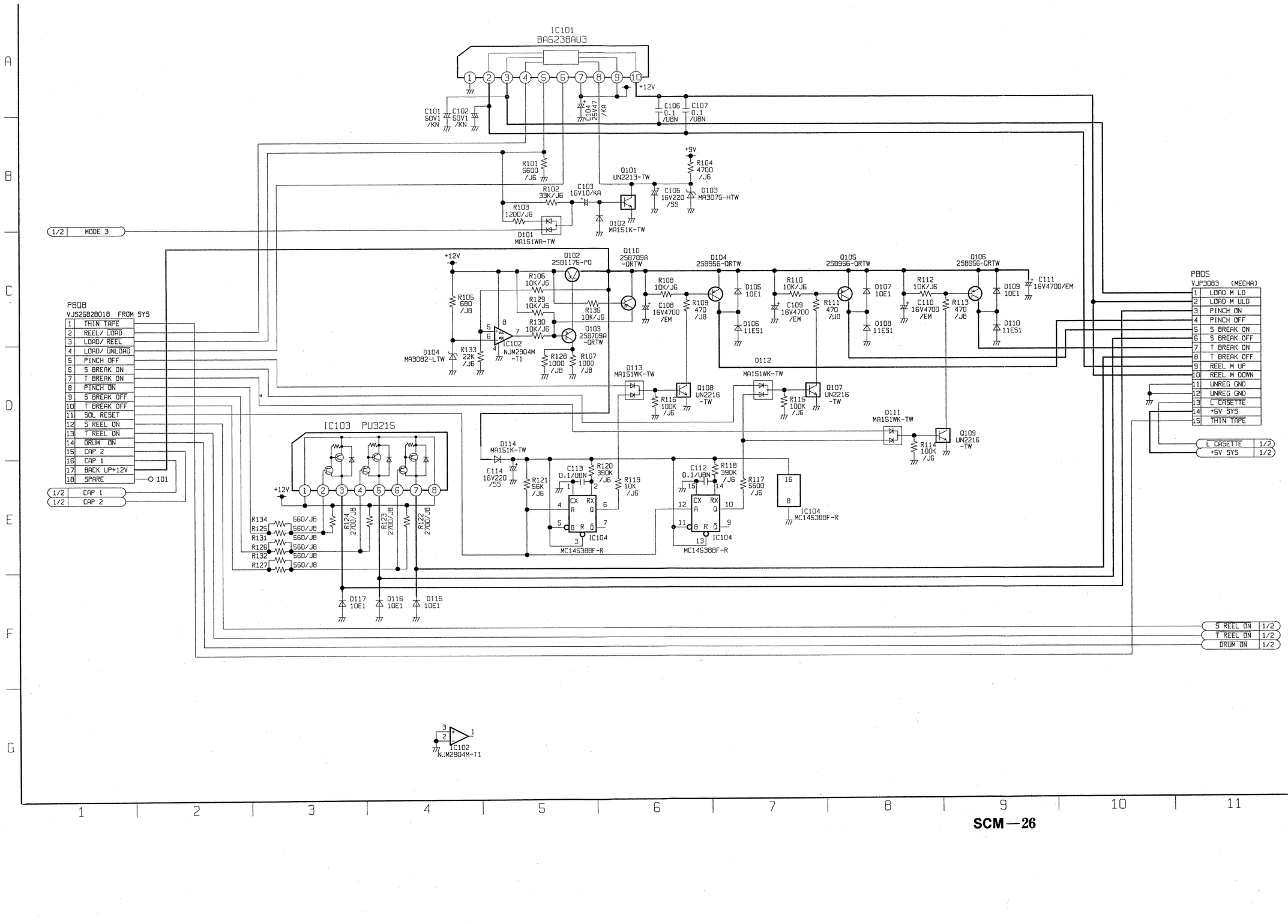

FRONT SCHEMATIC DIAGRAM

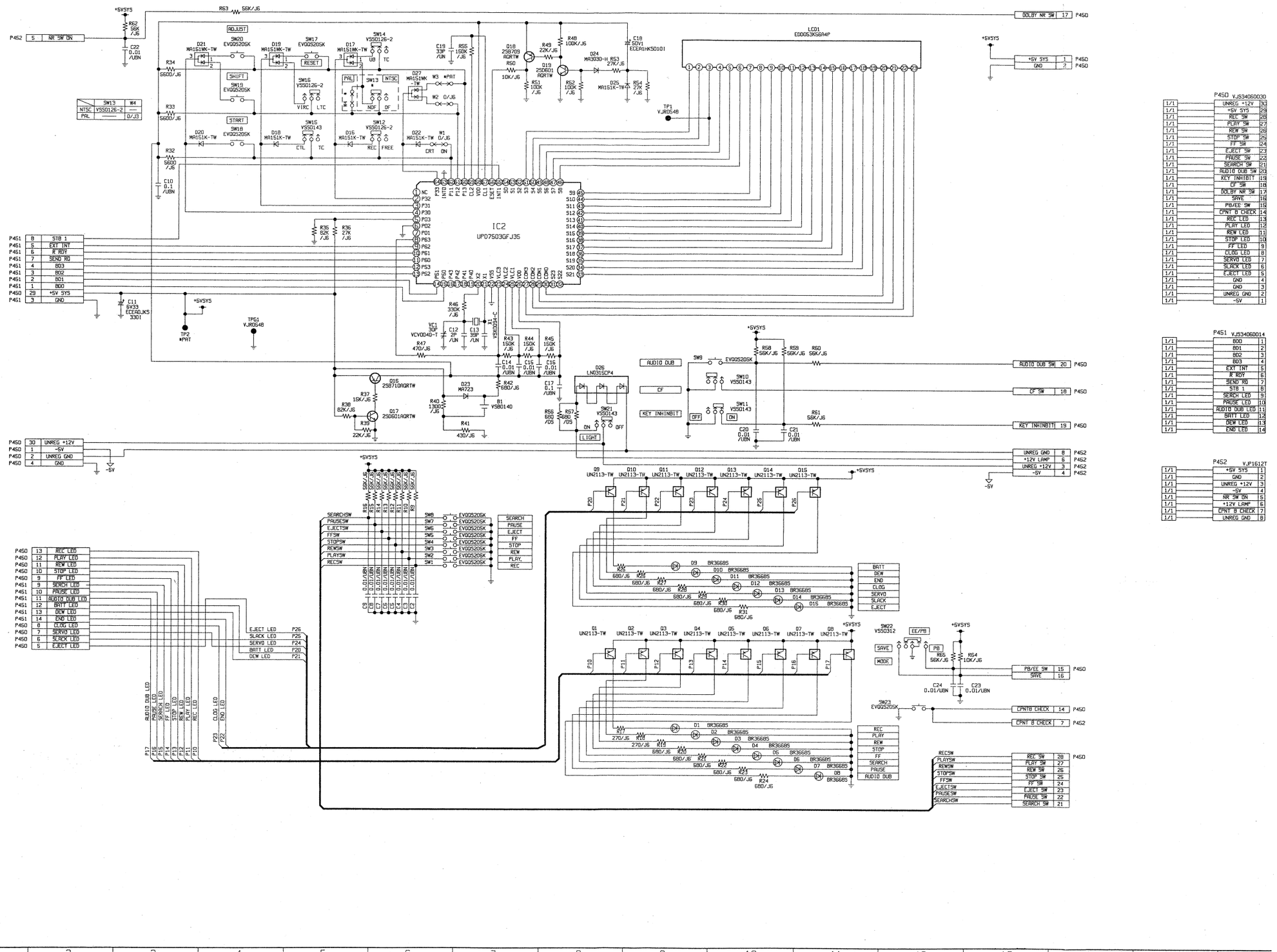

SCM—27

REVERSE SIDE

DRIVER 1/2, 2/2

VIDEO JACK SCHEMATIC DIAGRAM

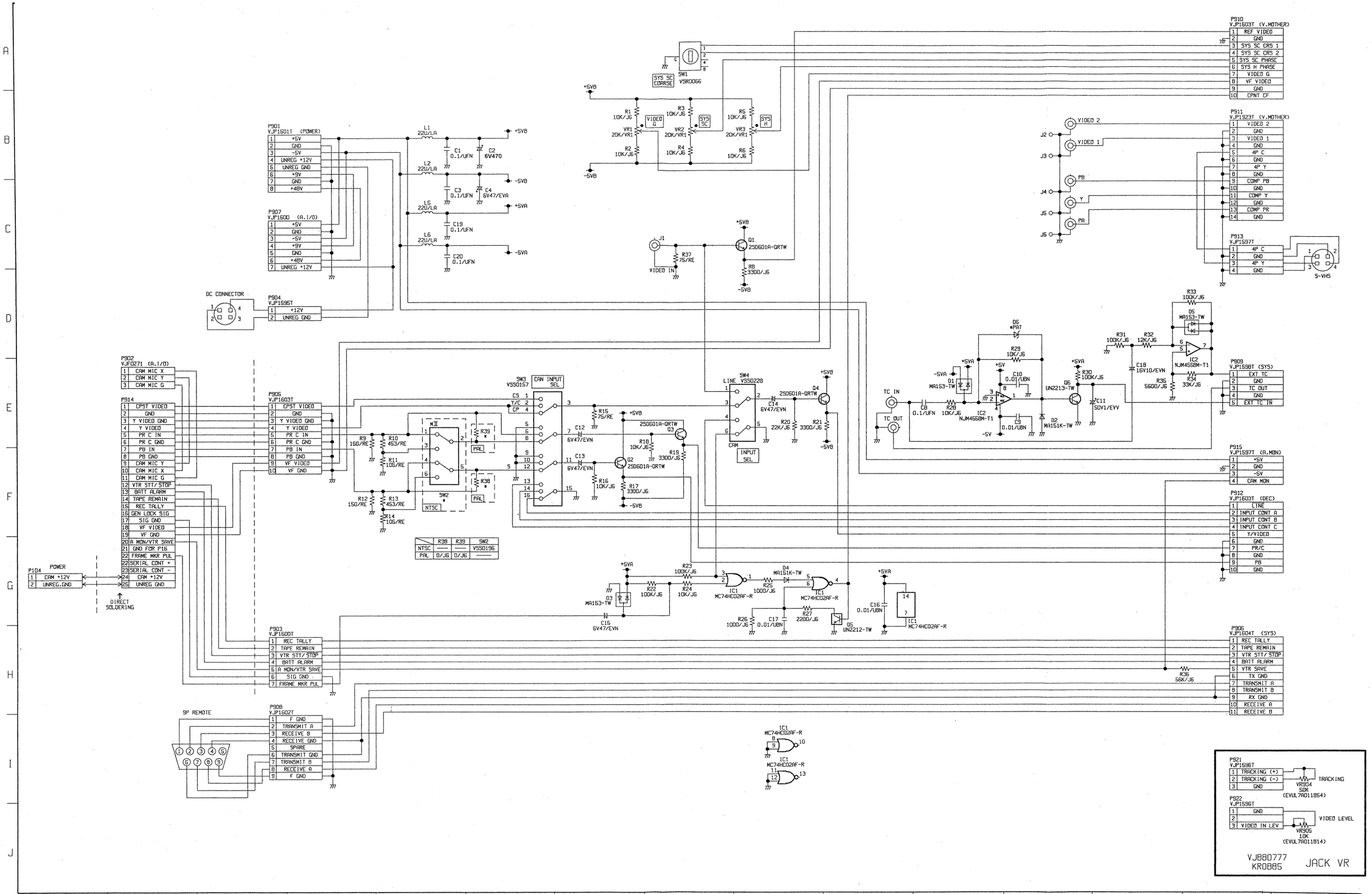

	R38	R39	SW2
NTSC	——	——	V550196
PAL	0/J6	0/J6	——

POWER SCHEMATIC DIAGRAM

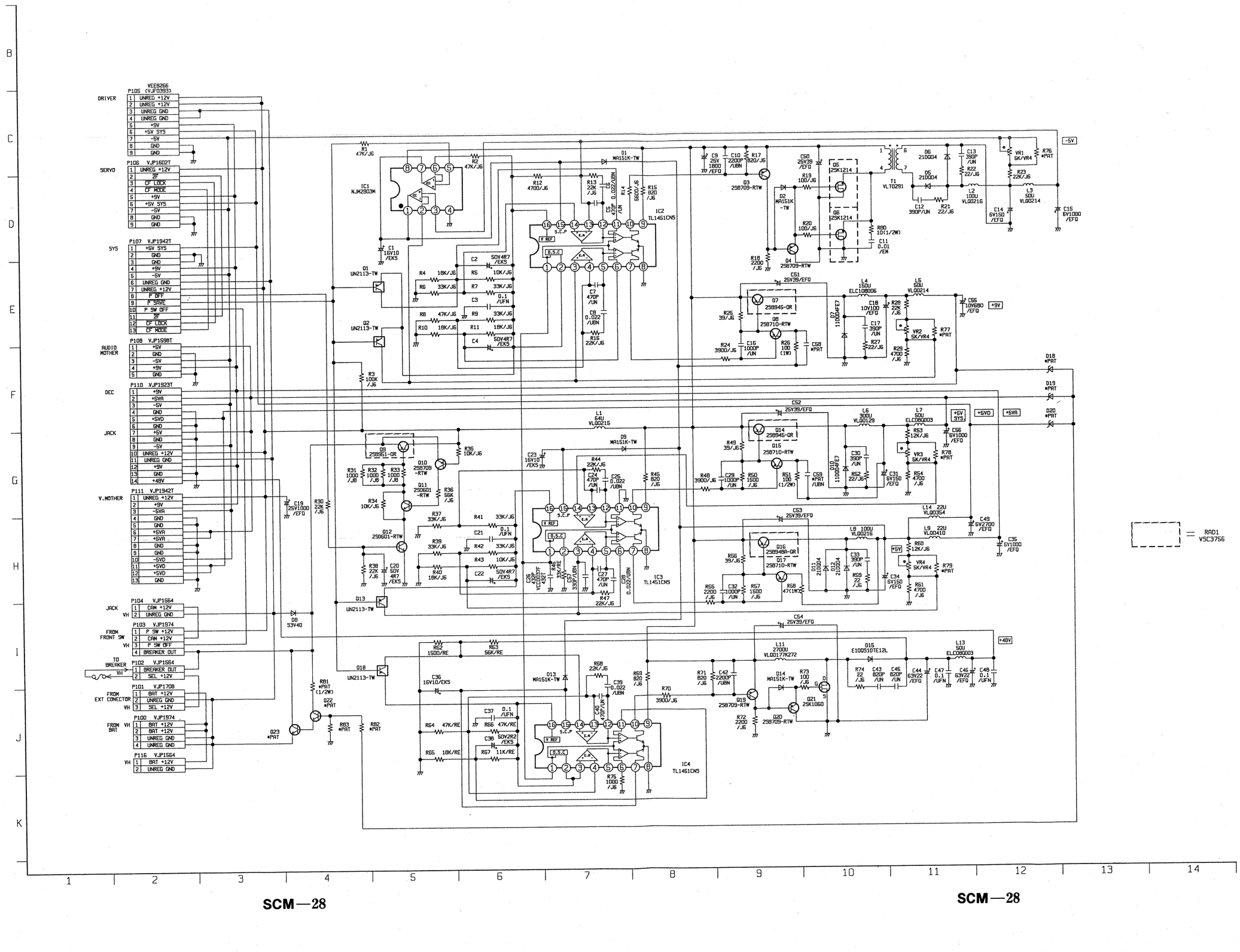

CIRCUIT BOARD LOCATION

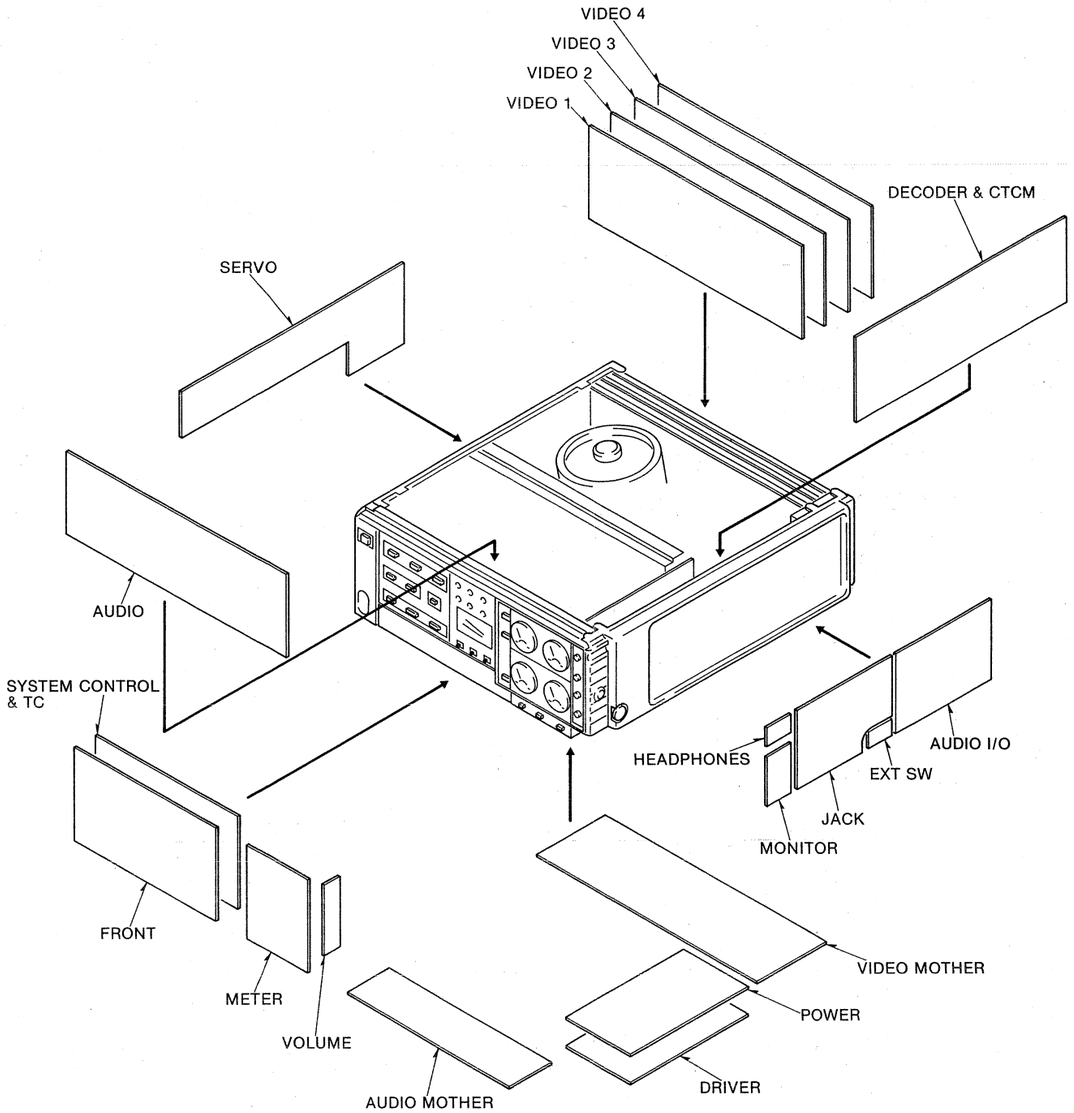

DECODER & CTCM C. B. A.

Integrated Circuits		
IC10	A-2	©
IC35	A-2	©
IC41	A-1	©
IC42	A-2	©
IC55	A-1	©
IC56	A-1	©
IC91	C-3	©
IC101	B-1	©
IC141	C-1	©
IC142	C-1	©
IC143	D-1	©
IC144	D-1	©
IC165	C-1	©
IC166	D-1	©
IC201	G-2	©
IC203	B-3	©
IC204	B-3	©
IC205	B-3	©
IC206	B-3	©
IC212	G-1	©
IC214	G-1	©
IC214	G-1	Ⓕ
IC215	G-1	©
IC216	G-2	©
IC217	E-2	©
IC218	E-2	©
IC219	E-2	©
IC220	E-1	©
IC221	E-1	©
IC224	E-1	©
IC401	C-3	©
IC402	C-3	©
IC403	D-3	©
IC404	D-3	©
IC405	D-3	©
IC406	D-3	©
IC407	D-3	©
IC408	C-3	©
IC501	I-1	©
IC505	F-1	©
IC601	H-2	©
IC602	H-2	©
IC606	I-3	©
IC703	H-3	©
IC704	B-2	©
IC705	H-3	©
IC706	G-3	Ⓕ
IC707	G-3	©
IC709	G-3	©
IC710	I-2	©
IC712	H-3	Ⓕ
IC714	F-3	©
IC781	B-2	©
IC881	B-3	©
IC882	B-3	©
IC883	B-2	©
IC901	H-3	©
IC909	I-3	©

Connectors		
P331	B-3	©
P331	B-3	Ⓕ
P332	F-2	©
P332	F-2	Ⓕ
P334	I-1	©
P334	I-1	Ⓕ
P335	C-2	©
P335	C-2	Ⓕ

Transistors		
Q2	B-2	Ⓕ
Q3	A-2	Ⓕ
Q16	A-3	Ⓕ
Q17	A-2	Ⓕ
Q18	A-2	Ⓕ
Q19	A-2	Ⓕ
Q20	A-2	Ⓕ
Q21	A-2	Ⓕ
Q41	A-1	Ⓕ
Q42	A-2	Ⓕ
Q81	C-1	Ⓕ
Q82	C-1	Ⓕ
Q91	A-2	Ⓕ
Q101	B-2	©
Q141	C-1	Ⓕ
Q142	C-1	Ⓕ
Q143	C-1	Ⓕ
Q144	C-1	Ⓕ
Q145	D-1	Ⓕ
Q146	D-1	Ⓕ
Q165	C-2	Ⓕ
Q166	C-1	Ⓕ
Q167	D-2	Ⓕ
Q168	C-2	Ⓕ
Q201	G-1	Ⓕ
Q202	G-2	Ⓕ
Q203	G-2	Ⓕ
Q204	G-1	Ⓕ
Q205	F-2	Ⓕ
Q206	F-2	Ⓕ
Q207	F-2	Ⓕ
Q208	F-2	Ⓕ
Q230	G-2	Ⓕ
Q231	G-2	Ⓕ
Q232	G-2	Ⓕ
Q233	F-2	Ⓕ
Q234	F-2	Ⓕ
Q235	G-2	Ⓕ
Q236	F-1	Ⓕ
Q237	F-2	Ⓕ
Q238	G-1	Ⓕ
Q240	F-2	Ⓕ
Q241	G-1	Ⓕ
Q243	E-2	Ⓕ
Q401	D-3	Ⓕ
Q501	H-2	Ⓕ
Q502	H-2	Ⓕ
Q503	H-1	Ⓕ
Q504	H-1	Ⓕ
Q506	H-1	Ⓕ
Q507	I-2	Ⓕ
Q509	I-1	Ⓕ
Q510	I-1	Ⓕ
Q511	I-1	Ⓕ
Q512	I-1	Ⓕ
Q514	I-1	Ⓕ
Q515	I-2	Ⓕ
Q523	E-1	Ⓕ
Q525	E-1	Ⓕ
Q526	E-1	Ⓕ
Q527	E-1	Ⓕ
Q528	F-1	Ⓕ
Q529	H-1	Ⓕ
Q530	I-2	Ⓕ
Q601	I-2	Ⓕ
Q604	I-2	Ⓕ
Q605	I-2	Ⓕ
Q606	I-2	Ⓕ
Q705	I-3	Ⓕ
Q707	G-3	Ⓕ
Q708	G-3	Ⓕ
Q709	G-3	Ⓕ
Q710	G-3	Ⓕ
Q711	I-2	Ⓕ
Q712	I-3	Ⓕ
Q881	C-2	Ⓕ
Q882	C-3	Ⓕ
Q883	C-2	Ⓕ
Q884	C-3	Ⓕ
Q885	C-2	Ⓕ
Q886	C-3	Ⓕ
Q887	C-2	Ⓕ
Q888	B-2	Ⓕ
Q889	C-2	Ⓕ
Q890	C-3	Ⓕ
Q891	C-2	Ⓕ
Q892	C-3	Ⓕ
Q893	B-2	Ⓕ
Q909	G-3	Ⓕ
Q910	H-2	Ⓕ
Q911	H-3	Ⓕ

Switches		
SW401	D-1	©
SW401	D-1	Ⓕ
SW701	I-1	©
SW701	I-1	Ⓕ

Test Points		
TP1	A-2	©
TP41	A-1	©
TP206	F-2	©
TP401	D-3	©
TP402	D-3	©
TP403	E-2	©
TP404	D-3	©
TP405	E-2	©
TP408	C-3	©
TP432	C-3	©
TP501	H-2	©
TP502	I-1	©
TP504	F-1	©
TP591	I-1	©
TP601	I-1	©
TP602	I-3	©
TP603	H-2	©
TP604	H-2	©
TP701	G-3	©
TP703	H-3	©
TP704	H-3	©
TP723	B-2	©
TP906	G-3	©
TP907	G-3	©
TPG1	C-2	©
TPG201	E-2	©
TPG501	I-1	©

Adjustment		
VC35	A-2	©
VC141	D-1	©
VC401	E-3	©
VL701	G-3	©
VL701	G-3	Ⓕ
VR41	A-1	©
VR41	A-1	Ⓕ
VR81	C-1	©
VR141	D-1	©
VR142	C-1	©
VR165	C-2	©
VR212	G-1	©
VR213	G-2	©
VR214	G-1	©
VR215	G-2	©
VR216	G-1	©
VR216	G-1	Ⓕ
VR217	G-1	©
VR217	G-1	Ⓕ
VR218	E-1	©
VR218	E-1	Ⓕ
VR401	C-3	©
VR403	D-3	©
VR501	I-2	©
VR502	I-1	©
VR505	I-1	©
VR505	I-1	Ⓕ
VR506	F-1	©
VR601	I-1	©
VR601	I-1	Ⓕ
VR602	H-1	©
VR602	H-1	Ⓕ
VR604	I-2	©
VR701	H-1	©
VR701	H-1	Ⓕ
VR702	G-3	©
VR705	B-2	©
VR906	G-3	©
VR907	G-3	©
VR907	G-3	Ⓕ

ADDRESS INFORMATION
©...COMPONENT SIDE
Ⓕ...FOIL SIDE

REVERSE SIDE
POWER

SCM—29

DECODER & CTCM P.C. BOARD (VEP83159A) FOR NTSC
(VEP83159B) FOR PAL

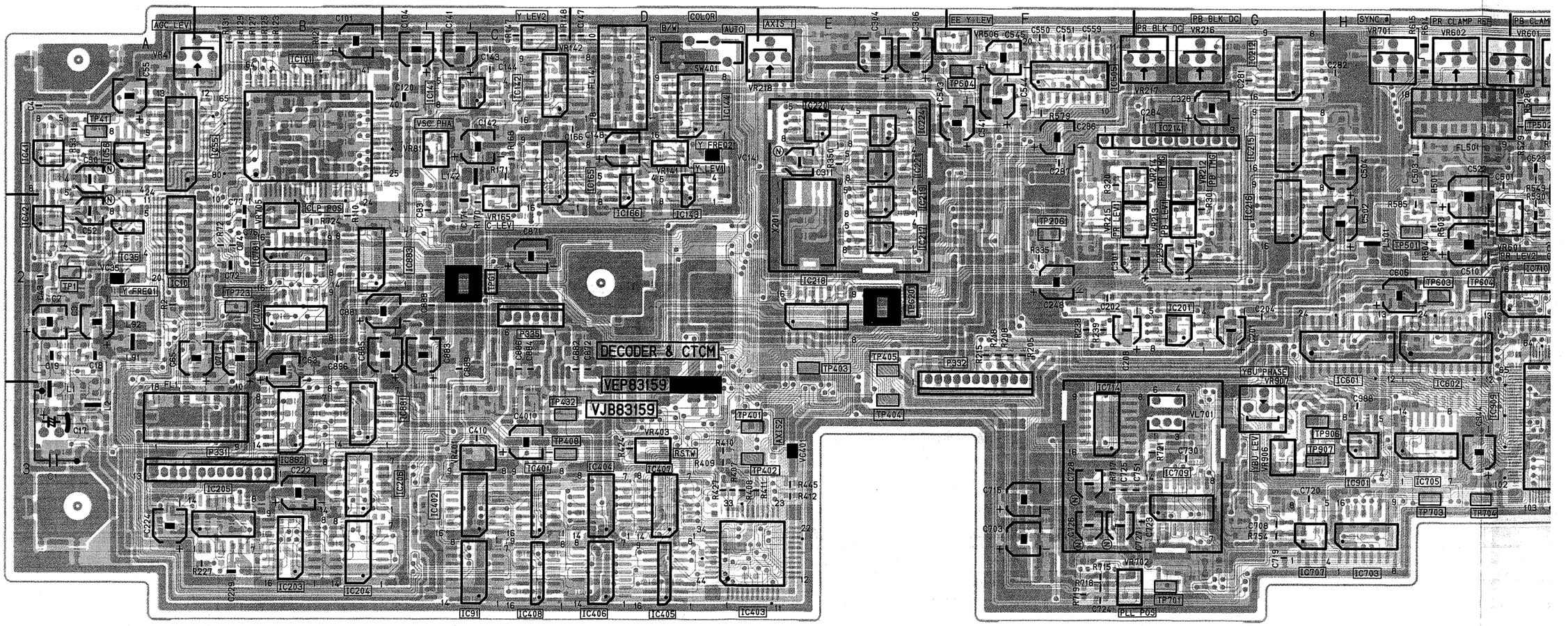

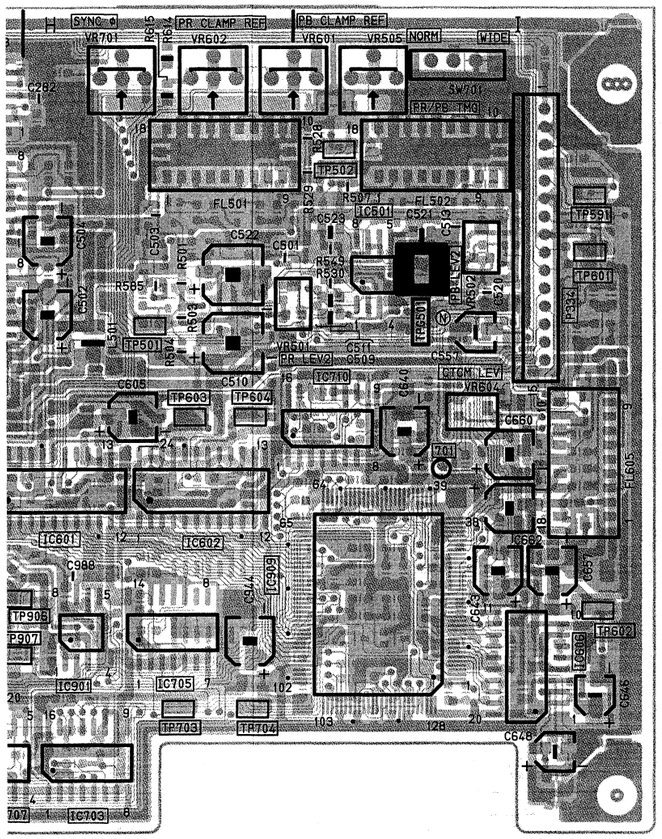
SYNC
PR CLAMP REF
PB CLAMP REF
VR701
VR602
VR601
VR505
NORM
WIDE
SW701
PR/PB TMC
IC601
IC602
IC705
IC703
IC901
TP502
TP503
TP504
TP601
TP603
TP604
TP605
TP606
TP607
TP703
TP704
TP906
TP907
TA602
TA704
FL501
FL502
FL605
IC501
IC710
VR501
VR504
VR506
VR507
VR508
VR509
VR510
VR511
VR512
VR513
VR514
VR515
VR516
VR517
VR518
VR519
VR520
VR521
VR522
VR523
VR524
VR525
VR526
VR527
VR528
VR529
VR530
VR531
VR532
VR533
VR534
VR535
VR536
VR537
VR538
VR539
VR540
VR541
VR542
VR543
VR544
VR545

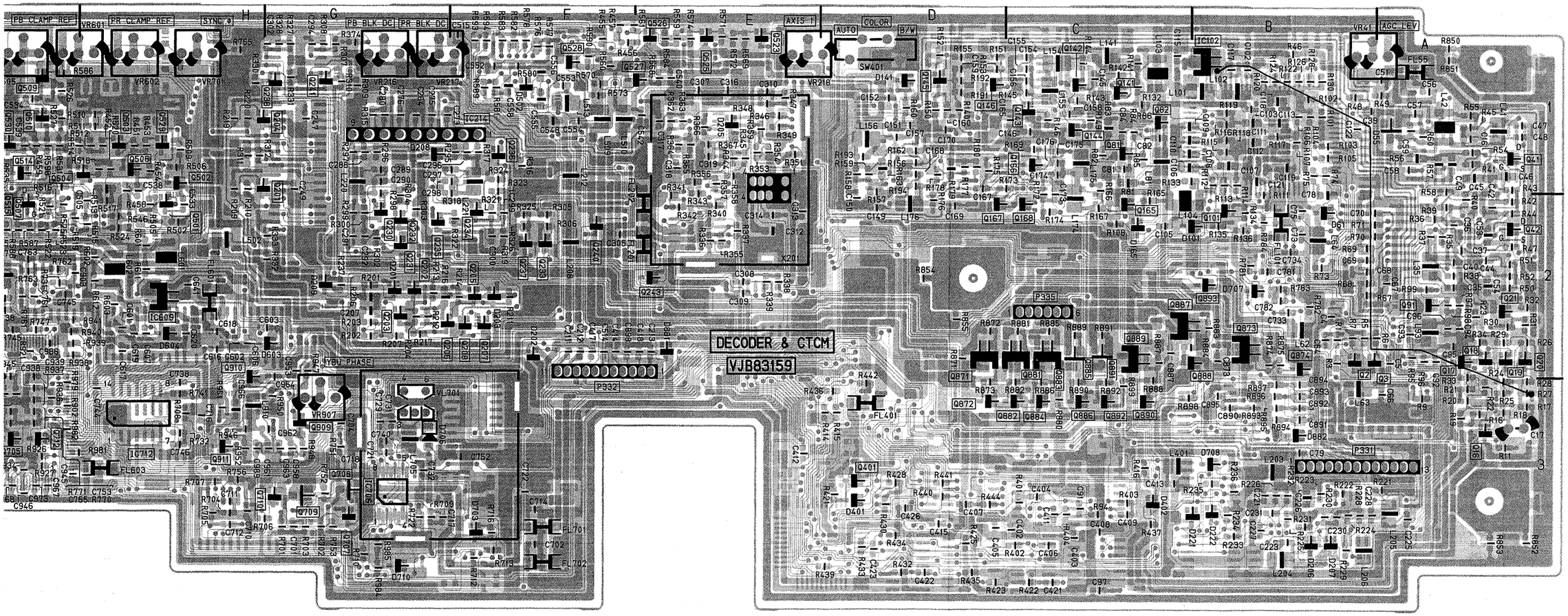

REVERSE SIDE
VIDEO 1

VIDEO 1 P.C. BOARD (VEP83163A) FOR NTSC
(VEP83163B) FOR PAL

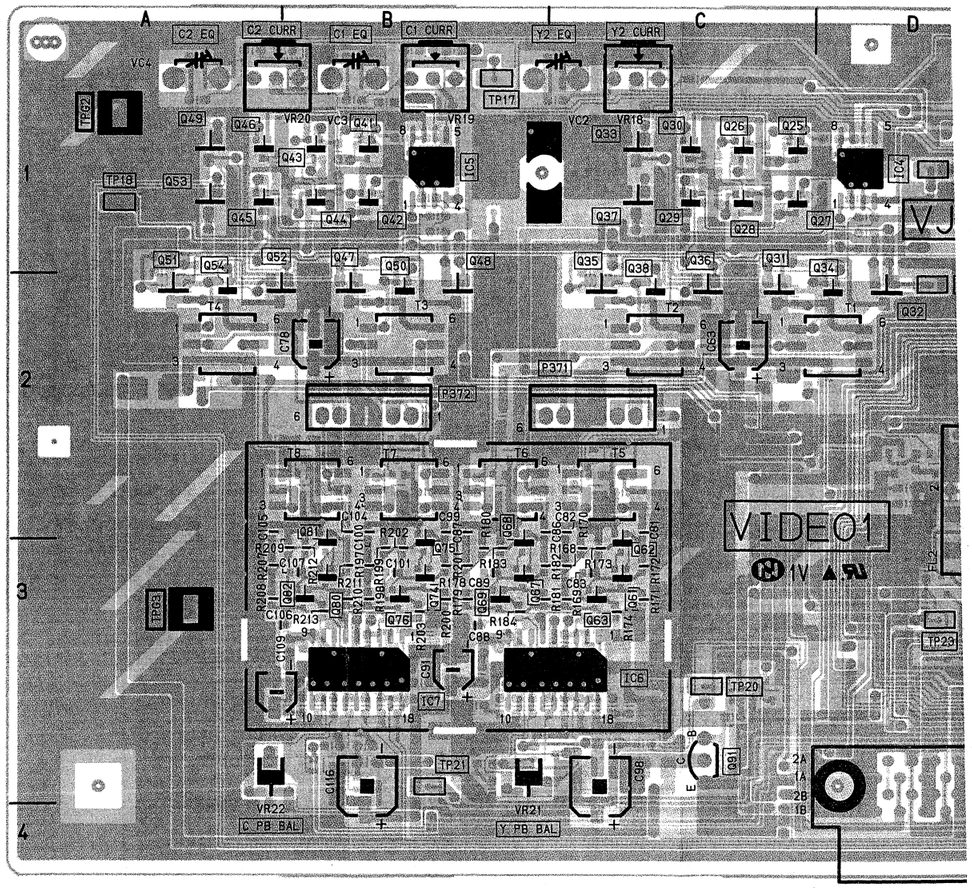

| VIDEO (1) C. B. A. | | |

O 1 P.C. BOARD (VEP83163A) FOR NTSC
(VEP83163B) FOR PAL

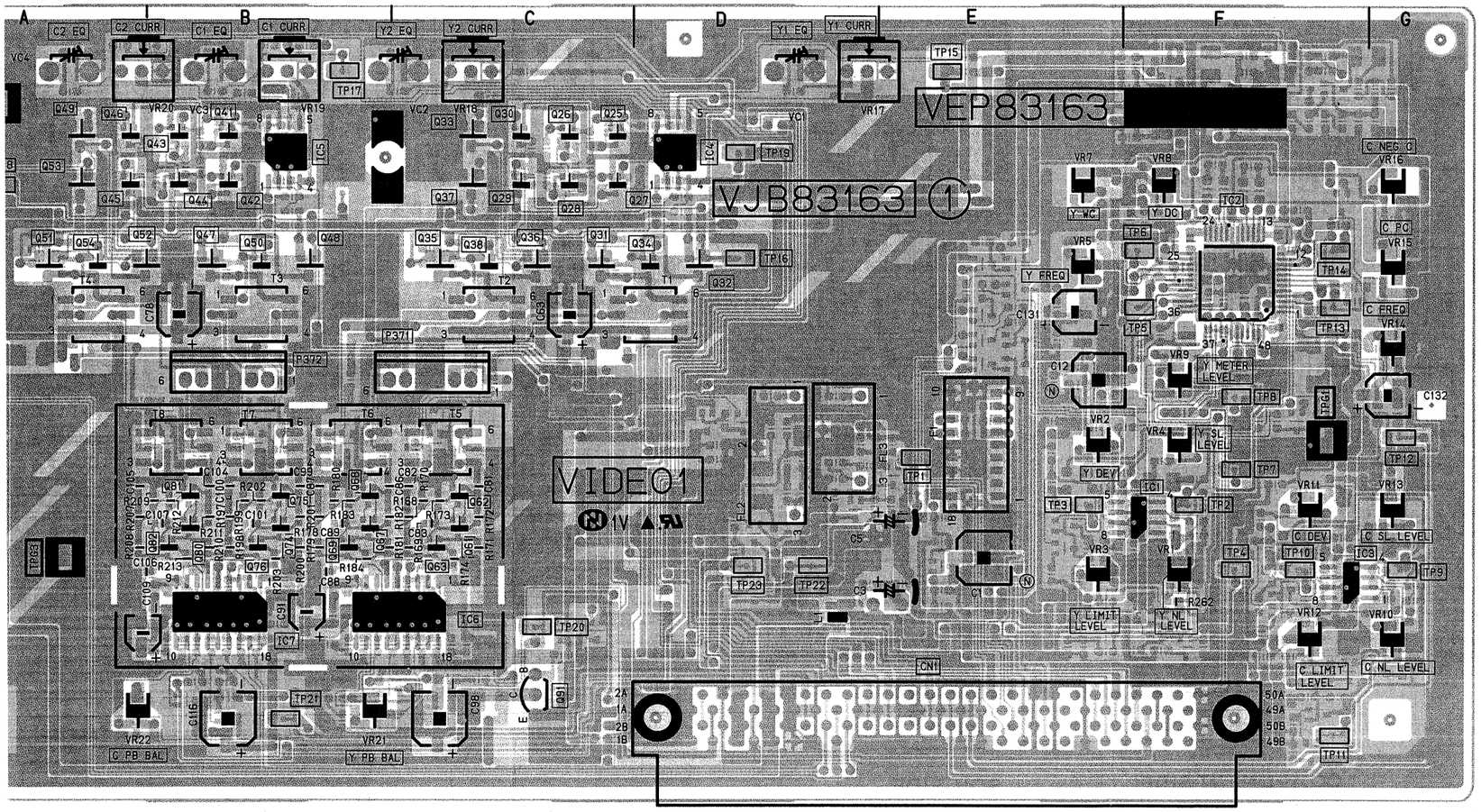

COMPONENT SIDE

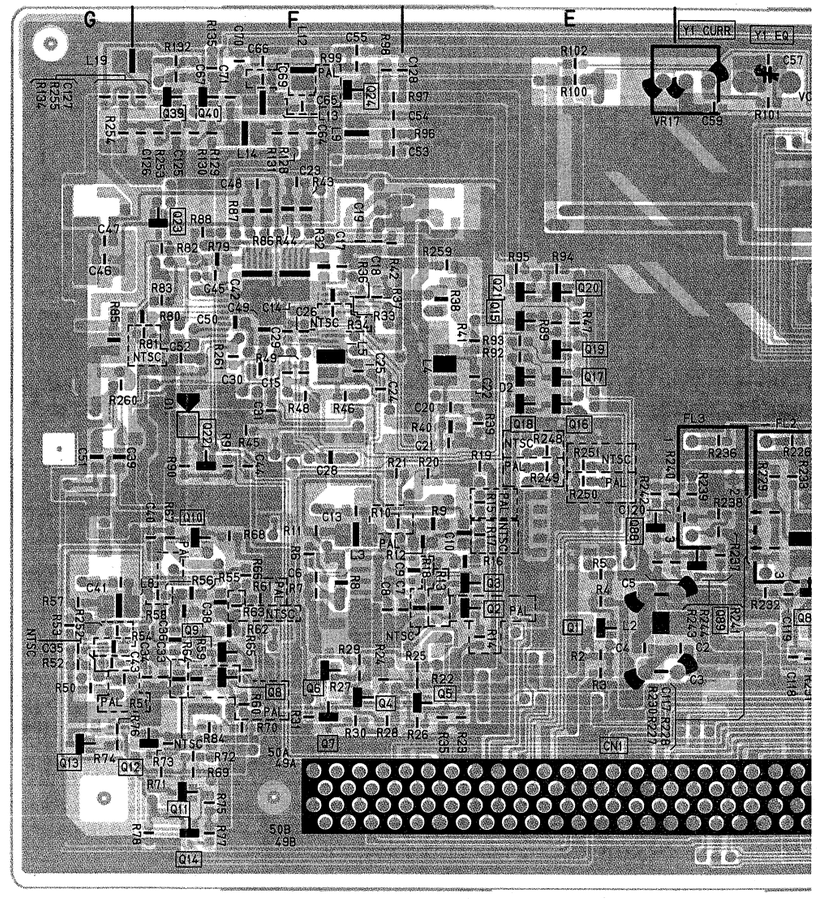

FOIL SIDE

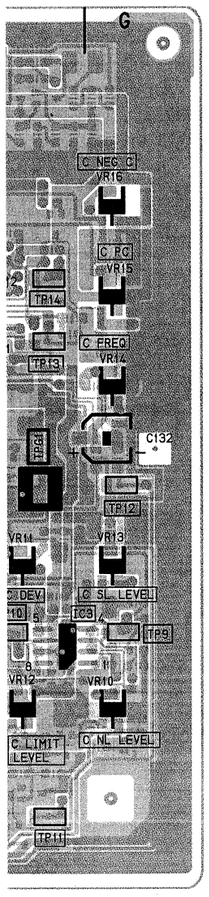

COMPONENT SIDE

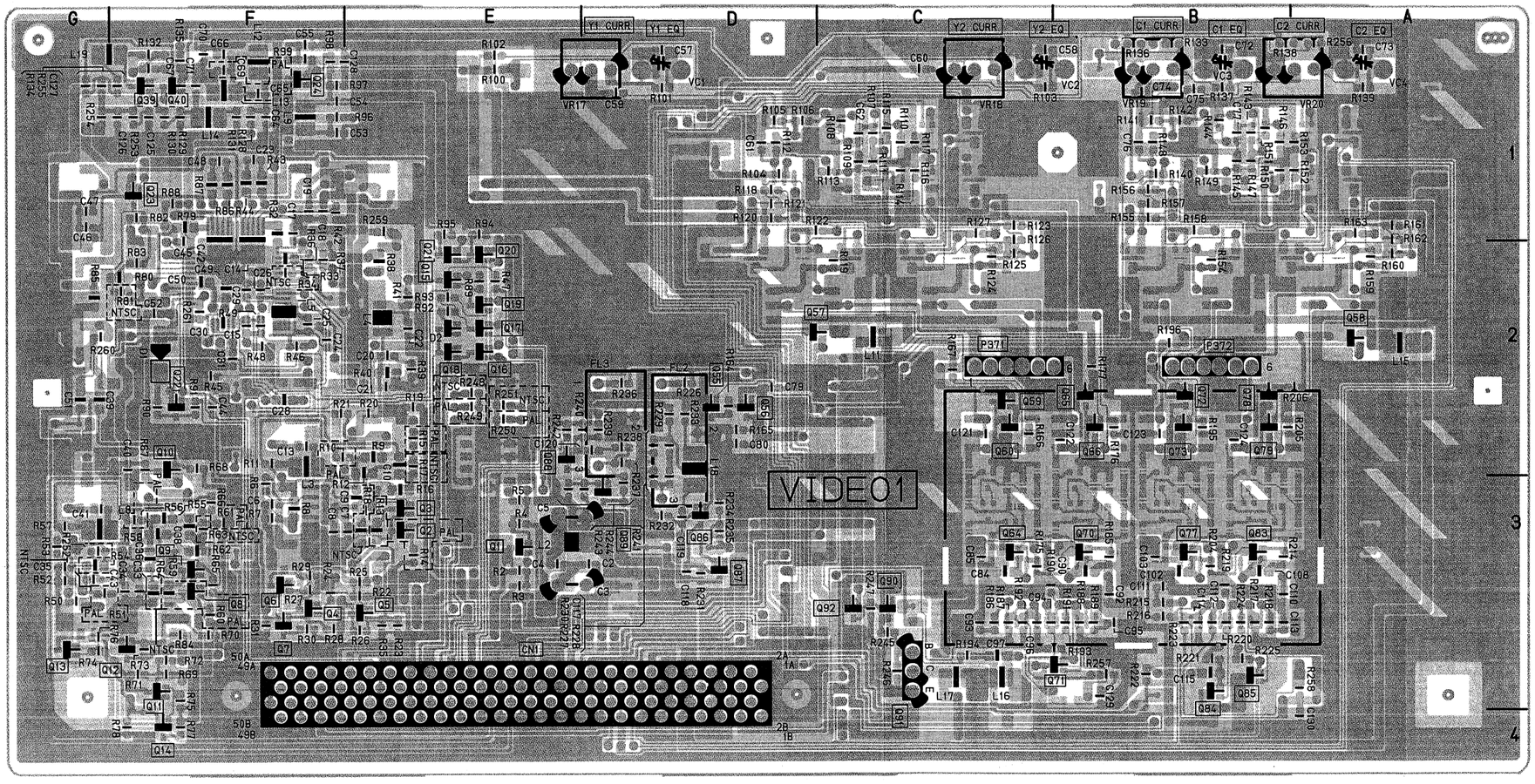

FOIL SIDE

VIDEO 2 P.C. BOARD (VEP83160A) FOR NTSC
(VEP83160B) FOR PAL

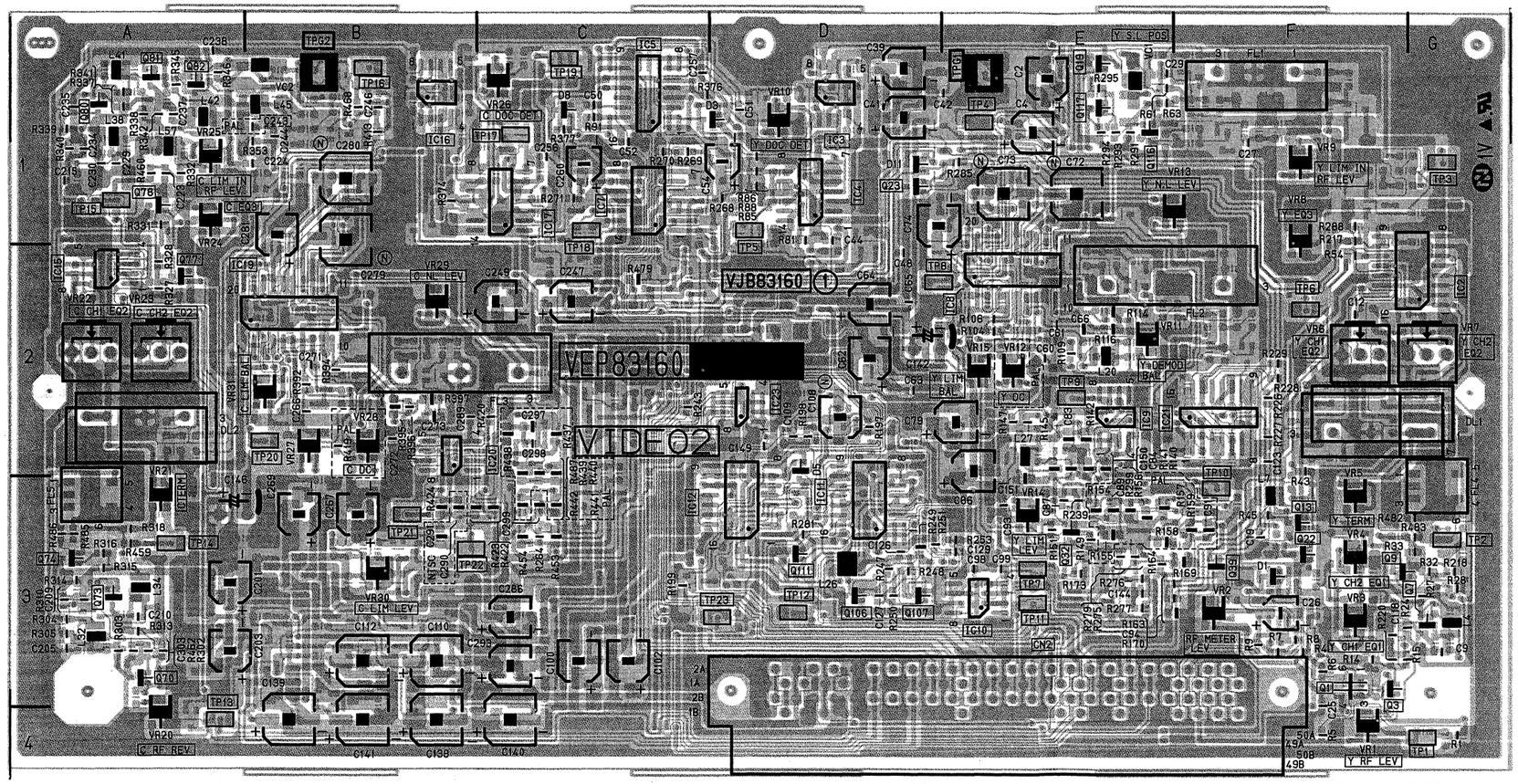

COMPONENT SIDE

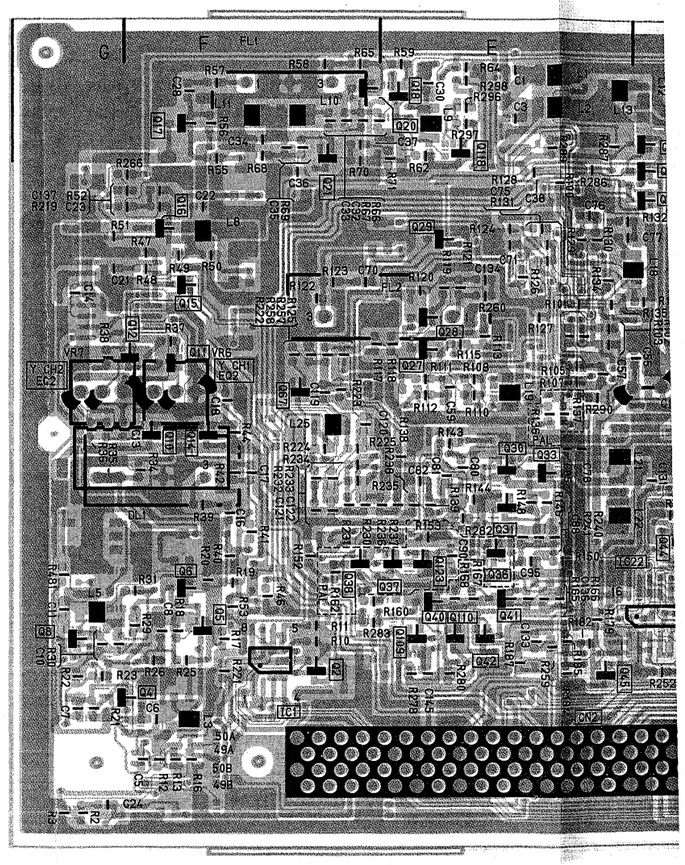

FOIL SIDE

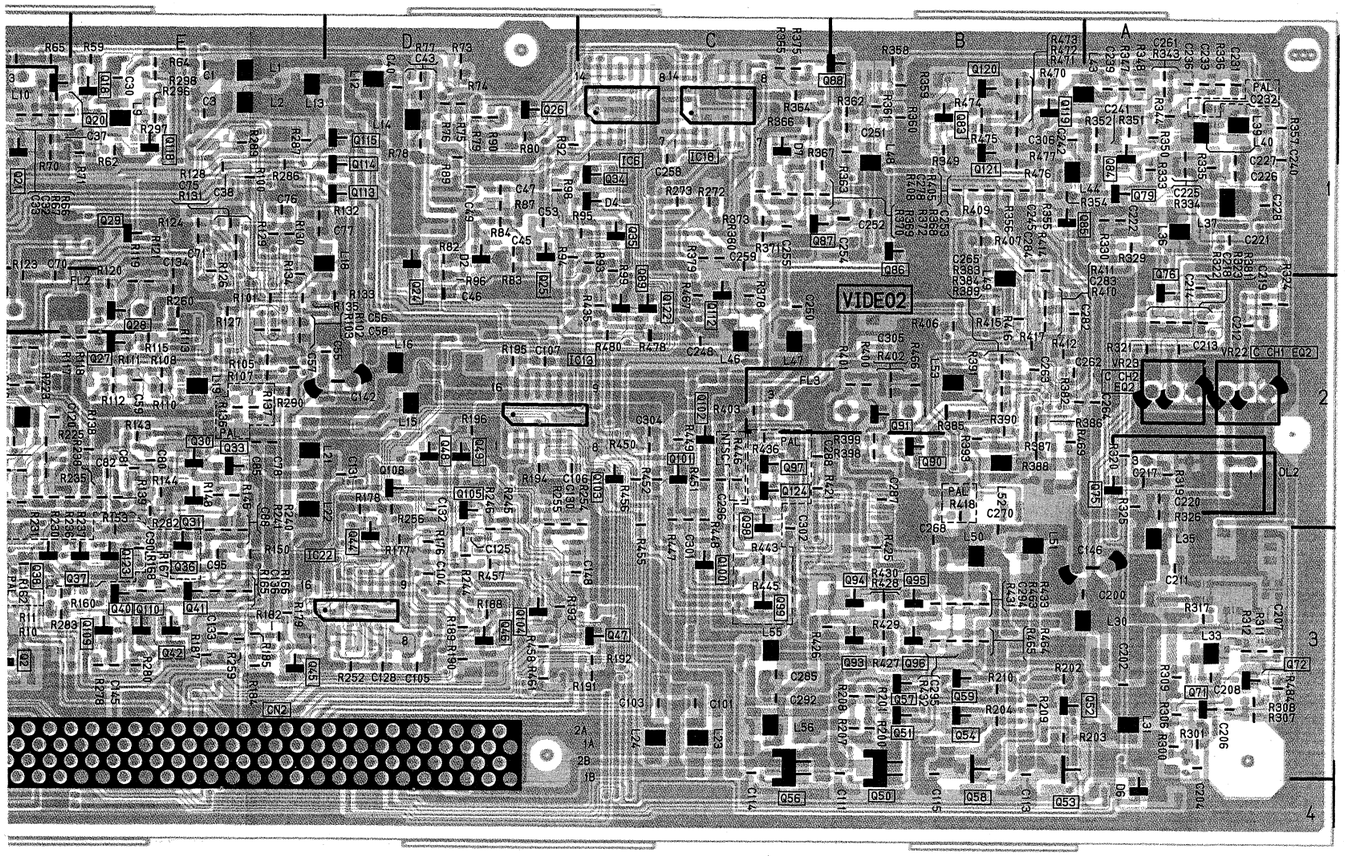

VIDEO (2) C. B. A.

Connectors						Q42	E-3	Ⓕ	Test Points		
CN2	E-3	Ⓒ				Q44	D-3	Ⓕ	TP1	G-4	Ⓒ
CN2	E-3	Ⓕ				Q45	E-3	Ⓕ	TP2	G-3	Ⓒ
Integrated Circuits						Q46	D-3	Ⓕ	TP3	G-1	Ⓒ
IC1	F-3	Ⓕ				Q47	C-3	Ⓕ	TP4	E-1	Ⓒ
IC2	G-2	Ⓒ				Q48	D-2	Ⓕ	TP5	D-1	Ⓒ
IC3	D-1	Ⓒ				Q49	D-2	Ⓕ	TP6	F-2	Ⓒ
IC4	D-1	Ⓒ				Q50	B-4	Ⓕ	TP7	E-3	Ⓒ
IC5	C-1	Ⓒ				Q51	B-3	Ⓕ	TP8	D-2	Ⓒ
IC6	C-1	Ⓕ				Q52	A-3	Ⓕ	TP9	E-2	Ⓒ
IC7	C-1	Ⓒ				Q53	B-4	Ⓕ	TP10	F-3	Ⓒ
IC8	E-2	Ⓒ				Q54	B-3	Ⓒ	TP11	E-3	Ⓒ
IC9	E-2	Ⓒ				Q56	C-4	Ⓕ	TP12	D-3	Ⓒ
IC10	E-3	Ⓒ				Q57	B-3	Ⓕ	TP13	A-3	Ⓒ
IC11	D-3	Ⓒ				Q58	B-4	Ⓕ	TP14	A-3	Ⓒ
IC12	C-3	Ⓒ				Q59	B-3	Ⓕ	TP15	A-1	Ⓒ
IC13	D-2	Ⓕ				Q67	F-2	Ⓕ	TP16	B-1	Ⓒ
IC15	A-2	Ⓒ				Q70	A-3	Ⓒ	TP17	C-1	Ⓒ
IC16	B-1	Ⓒ				Q71	A-3	Ⓕ	TP18	C-1	Ⓒ
IC17	C-1	Ⓒ				Q72	A-3	Ⓕ	TP19	C-1	Ⓒ
IC18	C-1	Ⓕ				Q73	A-3	Ⓒ	TP20	B-2	Ⓒ
IC19	B-2	Ⓒ				Q74	A-3	Ⓒ	TP21	B-3	Ⓒ
IC20	C-2	Ⓒ				Q75	A-2	Ⓕ	TP22	B-3	Ⓒ
IC21	E-2	Ⓒ				Q76	A-2	Ⓕ	TP23	D-3	Ⓒ
IC22	D-3	Ⓕ				Q77	A-2	Ⓒ	TPG1	E-1	Ⓒ
IC23	D-2	Ⓒ				Q78	A-1	Ⓒ	TPG2	B-1	Ⓒ
Transistors						Q79	A-1	Ⓕ	**Adjustments**		
Q1	F-3	Ⓒ				Q80	A-1	Ⓒ	VC1	E-1	Ⓒ
Q2	F-3	Ⓕ				Q81	A-1	Ⓒ	VC2	B-1	Ⓒ
Q3	F-3	Ⓒ				Q82	A-1	Ⓒ	VR1	F-4	Ⓒ
Q4	F-3	Ⓕ				Q83	B-1	Ⓕ	VR2	F-3	Ⓒ
Q5	F-3	Ⓕ				Q84	A-1	Ⓕ	VR3	F-3	Ⓒ
Q6	F-3	Ⓕ				Q85	B-1	Ⓕ	VR4	F-3	Ⓒ
Q7	G-3	Ⓒ				Q86	B-1	Ⓕ	VR5	F-3	Ⓒ
Q8	G-3	Ⓕ				Q87	C-1	Ⓕ	VR6	F-2	Ⓒ
Q9	F-3	Ⓒ				Q88	B-1	Ⓕ	VR6	F-2	Ⓕ
Q10	F-2	Ⓕ				Q89	C-2	Ⓕ	VR7	G-2	Ⓒ
Q11	F-2	Ⓕ				Q90	B-2	Ⓕ	VR7	G-2	Ⓕ
Q12	F-2	Ⓕ				Q91	B-2	Ⓕ	VR8	F-1	Ⓒ
Q13	F-3	Ⓒ				Q93	C-3	Ⓒ	VR9	F-1	Ⓒ
Q14	F-2	Ⓕ				Q94	C-3	Ⓕ	VR10	D-1	Ⓒ
Q15	F-2	Ⓕ				Q95	B-3	Ⓕ	VR11	E-2	Ⓒ
Q16	F-1	Ⓕ				Q96	C-3	Ⓕ	VR12	E-2	Ⓒ
Q17	F-1	Ⓕ				Q97	C-2	Ⓕ	VR13	F-1	Ⓒ
Q18	E-1	Ⓕ				Q98	C-3	Ⓕ	VR14	E-3	Ⓒ
Q19	E-1	Ⓒ				Q99	C-3	Ⓕ	VR15	E-2	Ⓒ
Q20	E-1	Ⓕ				Q100	C-3	Ⓕ	VR20	A-4	Ⓒ
Q21	F-1	Ⓕ				Q101	C-2	Ⓕ	VR21	B-2	Ⓒ
Q22	F-3	Ⓒ				Q102	C-2	Ⓕ	VR22	A-2	Ⓒ
Q23	D-1	Ⓒ				Q103	C-2	Ⓕ	VR22	A-2	Ⓕ
Q24	D-2	Ⓕ				Q104	D-3	Ⓕ	VR23	A-2	Ⓒ
Q25	D-2	Ⓕ				Q105	D-2	Ⓕ	VR23	A-2	Ⓕ
Q26	D-1	Ⓕ				Q106	D-3	Ⓒ	VR24	A-1	Ⓒ
Q27	E-2	Ⓕ				Q107	D-3	Ⓒ	VR25	A-1	Ⓒ
Q28	E-2	Ⓕ				Q108	D-2	Ⓕ	VR26	C-1	Ⓒ
Q29	E-1	Ⓕ				Q109	E-3	Ⓕ	VR27	B-2	Ⓒ
Q30	E-2	Ⓕ				Q110	E-3	Ⓕ	VR28	B-2	Ⓒ
Q31	E-3	Ⓕ				Q111	D-3	Ⓒ	VR29	B-2	Ⓒ
Q32	E-3	Ⓒ				Q112	C-2	Ⓕ	VR30	C-3	Ⓒ
Q33	E-2	Ⓕ				Q113	D-1	Ⓕ	VR31	A-2	Ⓒ
Q34	C-1	Ⓕ				Q114	D-1	Ⓕ			
Q35	C-1	Ⓕ				Q115	D-1	Ⓕ			
Q36	E-3	Ⓕ				Q116	E-1	Ⓒ			
Q37	E-3	Ⓒ				Q117	E-1	Ⓒ			
Q38	F-3	Ⓒ				Q118	E-1	Ⓕ			
Q39	F-3	Ⓒ				Q119	B-1	Ⓕ			
Q40	E-3	Ⓕ				Q120	B-1	Ⓕ			
Q41	E-3	Ⓕ				Q121	B-1	Ⓕ			
						Q122	C-2	Ⓕ			
						Q123	E-3	Ⓕ			
						Q124	C-2	Ⓕ			

ADDRESS INFORMATION
Ⓒ... COMPONENT SIDE
Ⓕ... FOIL SIDE

VIDEO 3 P.C. BOARD (VEP83161A), (PART OF VEB0522A) FOR NTSC (VEP83161B), (PART OF VEB0522B) FOR PAL

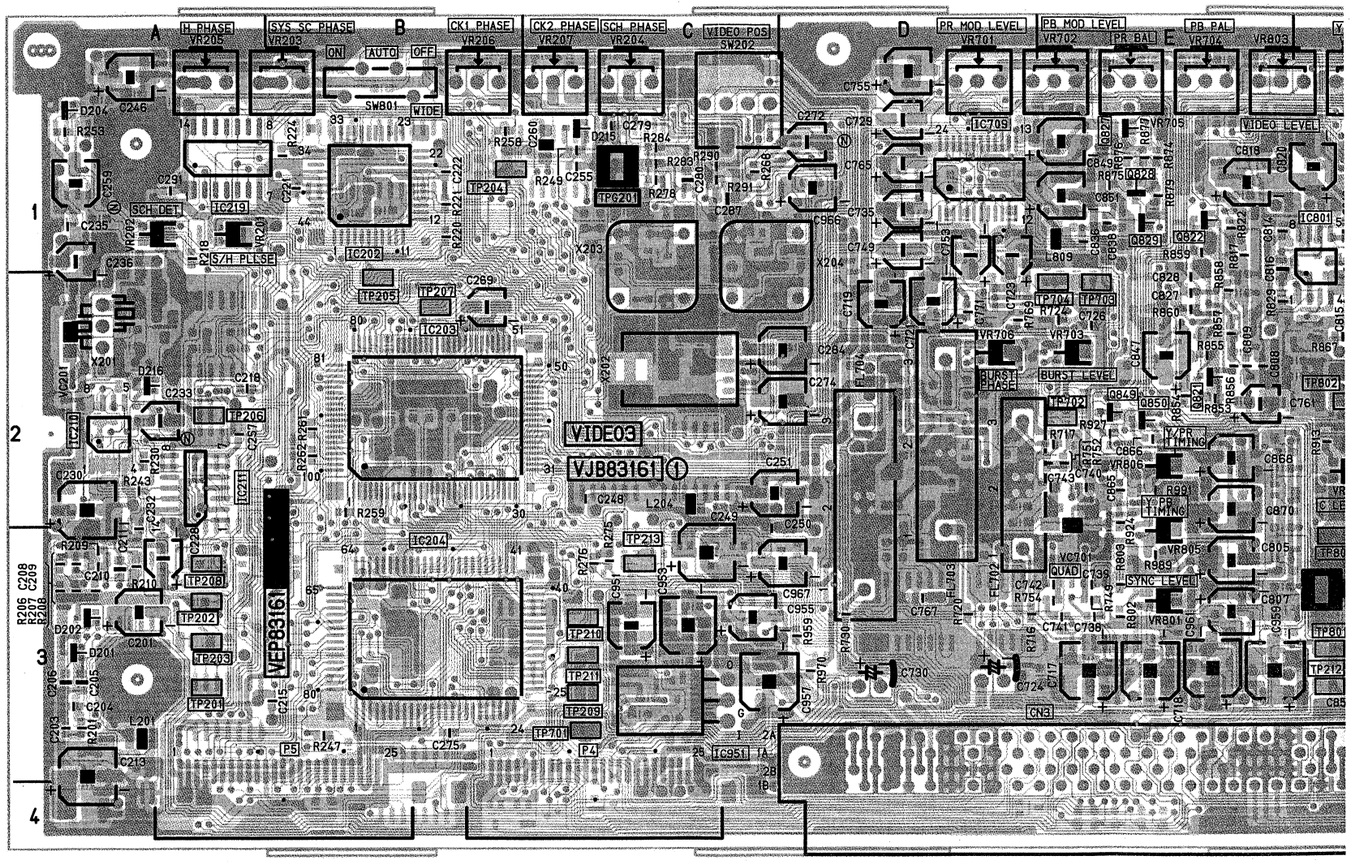

VIDEO (3) C. B. A.

Integrated Circuits		
IC201	A-3	Ⓕ
IC202	B-1	Ⓒ
IC203	B-2	Ⓒ
IC204	B-3	Ⓒ
IC205	A-3	Ⓕ
IC206	A-2	Ⓕ
IC207	C-1	Ⓕ
IC208	B-1	Ⓕ
IC209	A-2	Ⓕ
IC210	A-2	Ⓒ
IC211	A-2	Ⓒ
IC212	A-2	Ⓕ
IC213	C-2	Ⓕ
IC214	B-1	Ⓕ
IC215	D-1	Ⓕ
IC216	A-1	Ⓕ
IC217	C-1	Ⓕ
IC218	C-1	Ⓕ
IC219	A-1	Ⓒ
IC220	A-1	Ⓕ
IC221	B-3	Ⓕ
IC222	C-3	Ⓕ
IC223	C-2	Ⓕ
IC224	A-1	Ⓕ
IC706	D-3	Ⓕ
IC707	E-3	Ⓕ
IC708	D-3	Ⓕ
IC709	D-1	Ⓒ
IC801	F-1	Ⓒ
IC802	F-3	Ⓕ
IC951	C-3	Ⓒ
IC951	C-3	Ⓕ

Connectors		
CN3	E-3	Ⓒ
CN3	E-3	Ⓕ
P4	C-4	Ⓒ
P5	B-4	Ⓒ

Transistors		
Q201	A-3	Ⓕ
Q202	A-2	Ⓕ
Q203	A-2	Ⓕ
Q701	D-2	Ⓕ
Q702	D-2	Ⓕ
Q703	E-2	Ⓕ
Q704	E-2	Ⓕ
Q705	D-2	Ⓕ
Q706	D-2	Ⓕ
Q707	D-2	Ⓕ
Q708	D-2	Ⓕ
Q709	E-2	Ⓕ
Q710	D-2	Ⓕ
Q711	E-2	Ⓕ
Q712	D-2	Ⓕ
Q801	E-3	Ⓕ
Q802	F-3	Ⓕ
Q803	F-3	Ⓕ
Q804	F-2	Ⓕ
Q805	F-2	Ⓕ
Q806	E-2	Ⓕ
Q807	E-1	Ⓕ
Q808	E-2	Ⓕ
Q809	E-1	Ⓕ
Q810	F-1	Ⓕ
Q811	F-1	Ⓕ
Q812	F-2	Ⓕ
Q815	F-2	Ⓕ
Q816	F-2	Ⓕ
Q819	F-2	Ⓕ
Q820	E-2	Ⓕ
Q821	E-2	Ⓒ
Q822	E-1	Ⓒ
Q823	E-2	Ⓕ
Q824	E-1	Ⓕ
Q825	F-2	Ⓕ
Q826	F-2	Ⓕ
Q827	E-1	Ⓒ
Q828	E-1	Ⓒ
Q829	E-1	Ⓒ
Q830	E-2	Ⓕ
Q831	F-3	Ⓕ
Q832	F-3	Ⓕ
Q833	F-3	Ⓒ
Q834	F-3	Ⓒ
Q835	F-3	Ⓕ
Q838	F-3	Ⓕ
Q839	G-3	Ⓕ
Q842	F-3	Ⓕ
Q843	F-2	Ⓕ
Q846	F-2	Ⓕ
Q847	E-2	Ⓕ
Q848	E-2	Ⓕ
Q849	E-2	Ⓒ
Q850	E-2	Ⓒ
Q851	F-1	Ⓕ
Q854	F-1	Ⓕ
Q855	F-1	Ⓕ
Q858	F-1	Ⓕ
Q859	E-2	Ⓕ
Q860	G-1	Ⓒ
Q861	G-1	Ⓒ
Q951	C-3	Ⓕ
Q952	C-3	Ⓕ
Q953	C-3	Ⓕ
Q954	C-3	Ⓕ
Q955	C-3	Ⓕ
Q956	C-3	Ⓕ
Q957	C-3	Ⓕ
Q958	C-3	Ⓕ
Q959	E-2	Ⓕ
Q960	E-3	Ⓕ
Q961	E-3	Ⓕ
Q962	E-3	Ⓕ
Q963	F-3	Ⓕ
Q964	F-3	Ⓒ
Q965	F-4	Ⓒ
Q966	F-4	Ⓒ

Switches		
SW202	C-1	Ⓒ
SW202	C-1	Ⓕ
SW801	B-1	Ⓒ
SW801	B-1	Ⓕ
SW802	F-1	Ⓒ
SW802	F-1	Ⓕ

Test Points		
TP201	A-3	Ⓒ
TP202	A-3	Ⓒ
TP203	A-3	Ⓒ
TP204	B-1	Ⓒ
TP205	B-2	Ⓒ
TP206	A-2	Ⓒ
TP207	B-2	Ⓒ
TP208	A-3	Ⓒ
TP209	C-3	Ⓒ
TP210	C-3	Ⓒ
TP211	C-3	Ⓒ
TP212	F-3	Ⓒ
TP213	C-3	Ⓒ
TP701	C-3	Ⓒ
TP702	E-2	Ⓒ
TP703	E-2	Ⓒ
TP704	E-2	Ⓒ
TP801	F-3	Ⓒ
TP802	F-2	Ⓒ
TP805	G-2	Ⓒ
TP806	F-3	Ⓒ
TP812	G-3	Ⓒ
TPG201	C-1	Ⓒ
TPG701	F-1	Ⓒ
TPG801	F-3	Ⓒ

Adjustments		
VC201	A-2	Ⓒ
VC701	E-3	Ⓒ
VR201	A-1	Ⓒ
VR202	A-1	Ⓒ
VR203	B-1	Ⓒ
VR203	B-1	Ⓕ
VR204	C-1	Ⓒ
VR204	C-1	Ⓕ
VR205	A-1	Ⓒ
VR205	A-1	Ⓕ
VR206	B-1	Ⓒ
VR206	B-1	Ⓕ
VR207	C-1	Ⓒ
VR207	C-1	Ⓕ
VR701	D-1	Ⓒ
VR701	D-1	Ⓕ
VR702	E-1	Ⓒ
VR702	E-1	Ⓕ
VR703	E-2	Ⓒ
VR704	E-1	Ⓒ
VR704	E-1	Ⓕ
VR705	E-1	Ⓒ
VR705	E-1	Ⓕ
VR706	D-2	Ⓒ
VR801	E-3	Ⓒ
VR802	F-1	Ⓒ
VR802	F-1	Ⓕ
VR803	E-1	Ⓒ
VR803	E-1	Ⓕ
VR804	F-2	Ⓒ
VR805	E-3	Ⓒ
VR806	E-2	Ⓒ
VR807	F-1	Ⓒ
VR807	F-1	Ⓕ
VR808	F-1	Ⓒ
VR808	F-1	Ⓕ

ADDRESS INFORMATION
Ⓒ... COMPONENT SIDE
Ⓕ... FOIL SIDE

REVERSE SIDE
VIDEO 2

NTSC
PAL

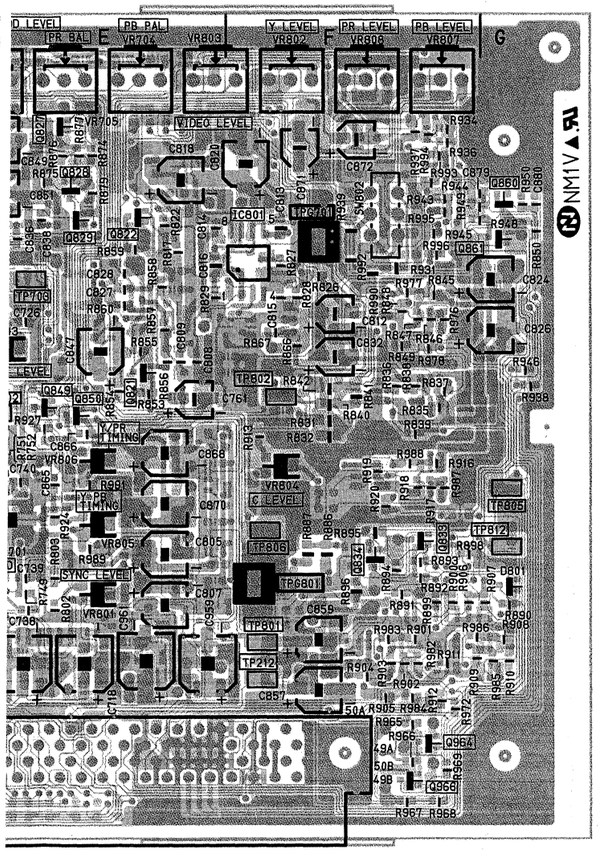

COMPONENT SIDE

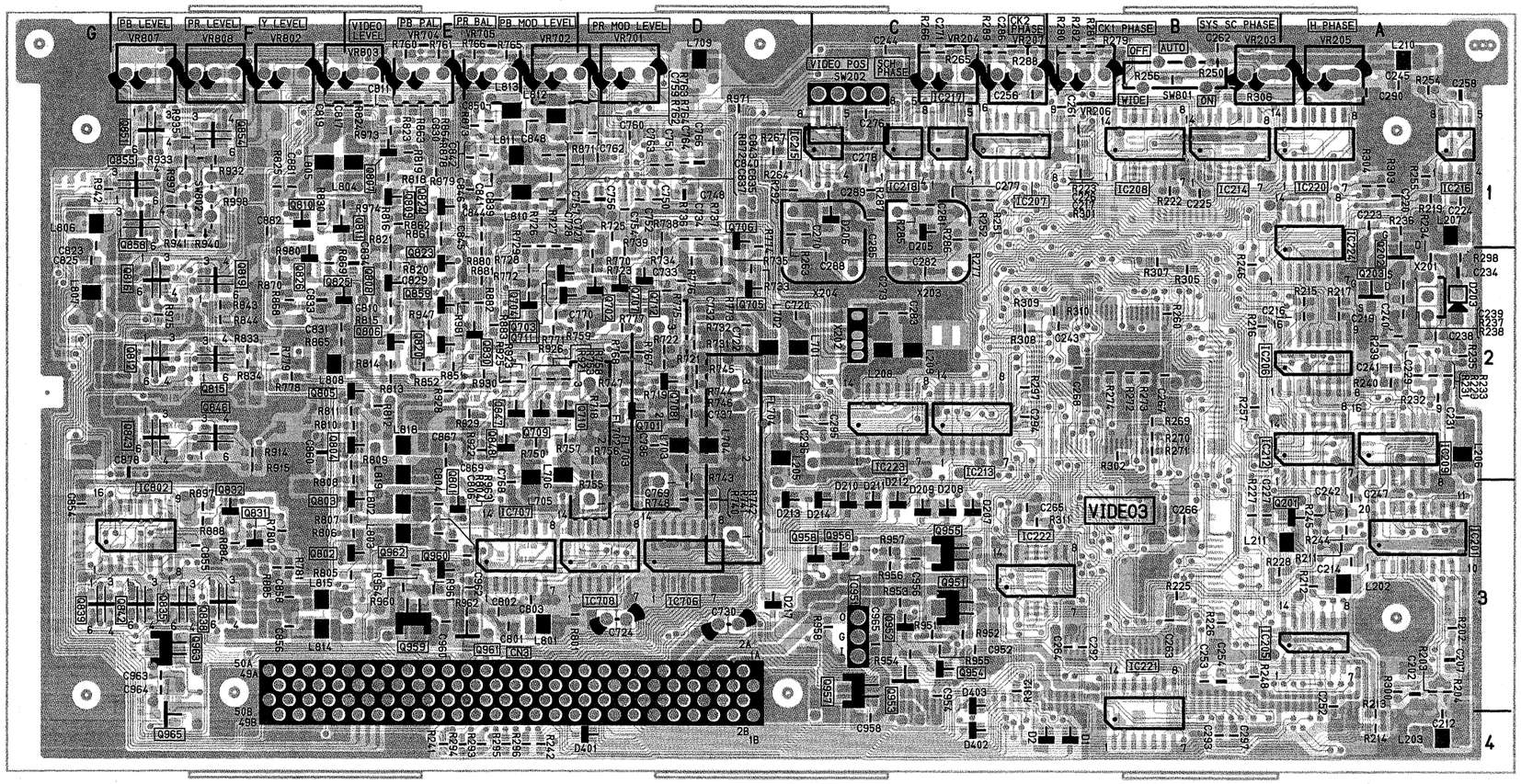

FOIL SIDE

VIDEO 4 P.C. BOARD (VEP83162A), (PART OF VEB0522A) FOR NTSC
(VEP83162B), (PART OF VEB0522B) FOR PAL

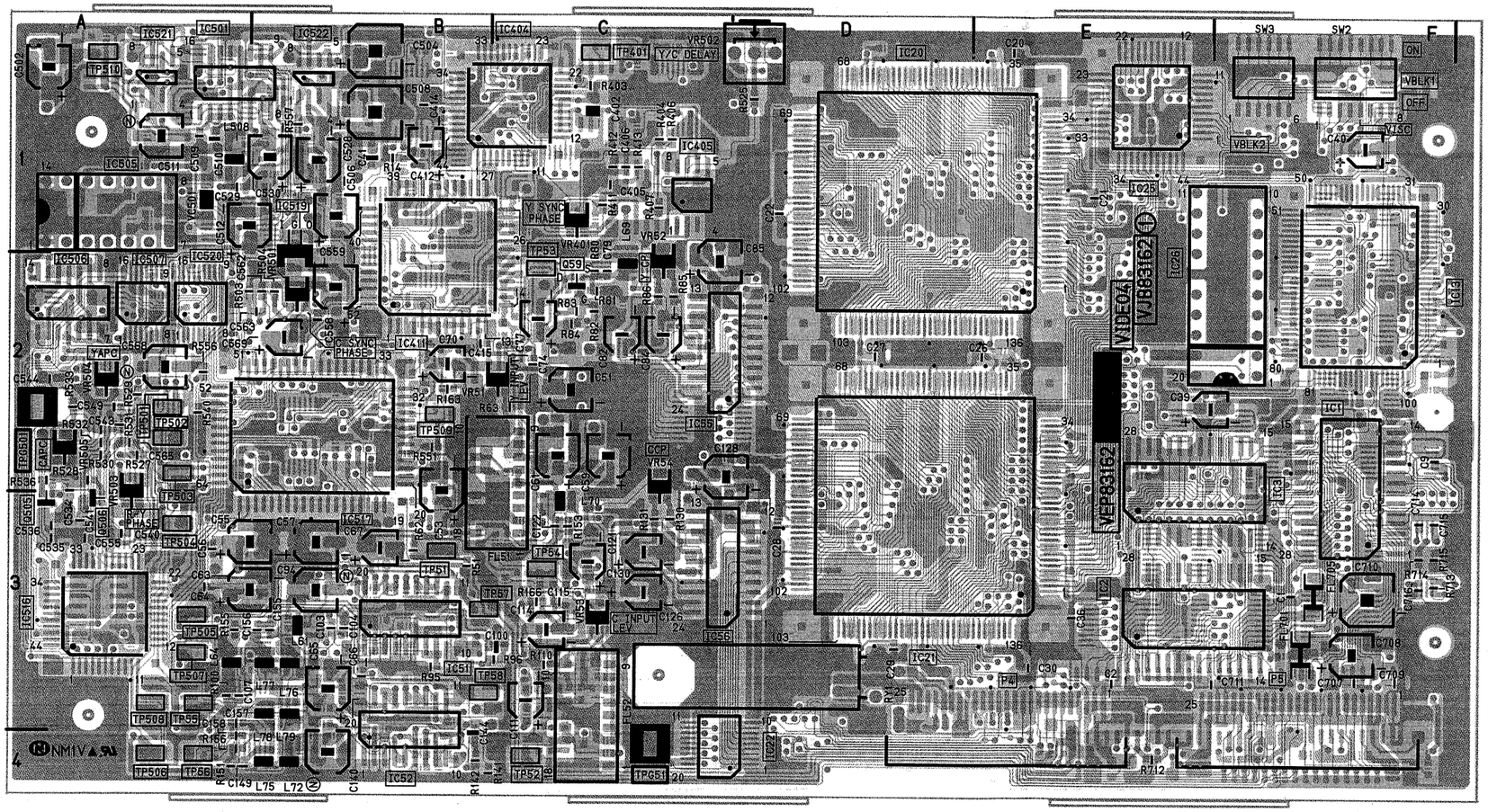

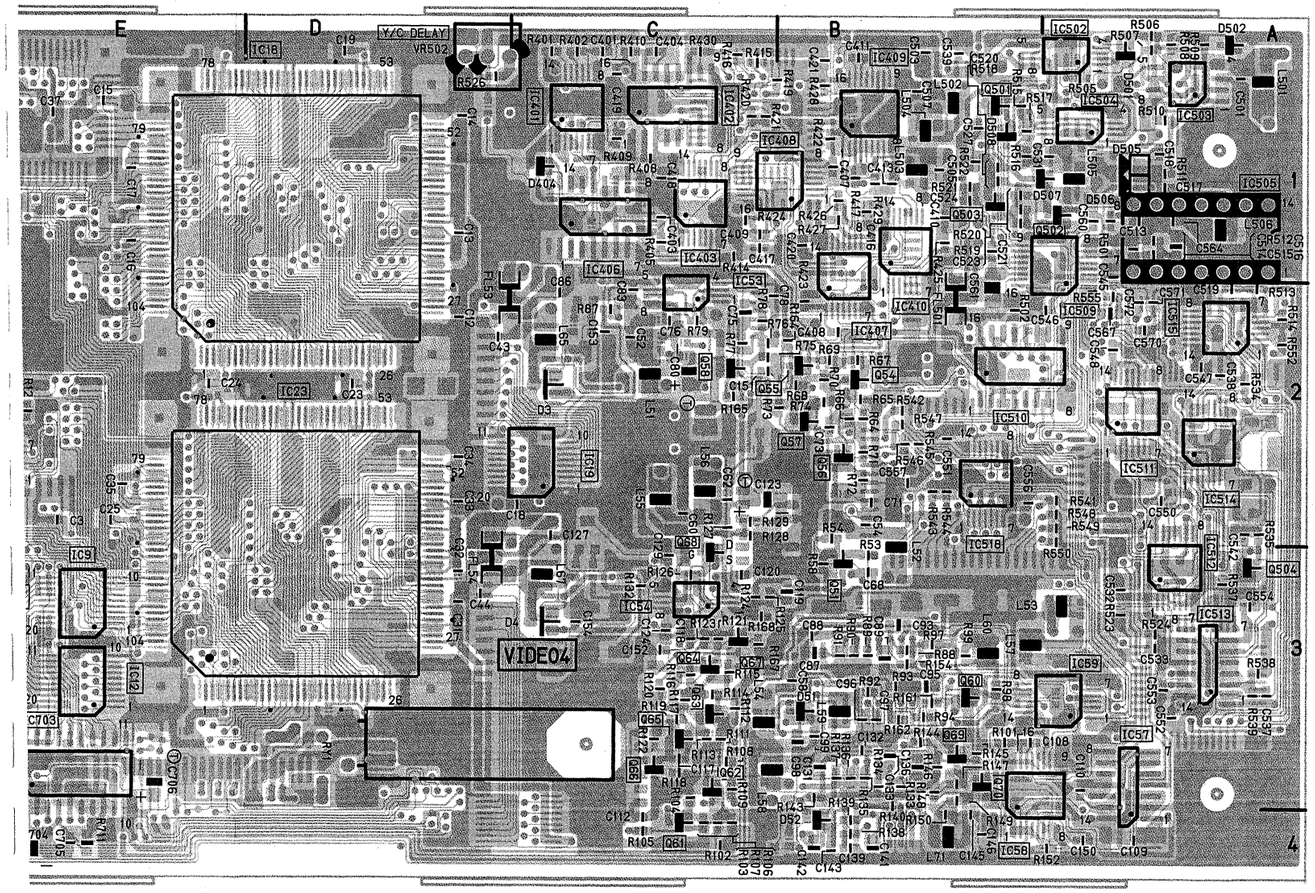

VIDEO (4) C. B. A.					
Integrated Circuits			**Connectors**		
IC1	F-2	Ⓒ	P4	E-3	Ⓒ
IC2	E-3	Ⓒ	P5	F-3	Ⓒ
IC3	F-2	Ⓒ	**Transistors**		
IC7	F-3	Ⓕ			
IC8	E-3	Ⓕ	Q51	B-3	Ⓕ
IC9	E-3	Ⓕ	Q54	B-2	Ⓕ
IC10	F-3	Ⓕ	Q55	B-2	Ⓕ
IC11	F-3	Ⓕ	Q56	B-2	Ⓕ
IC12	E-3	Ⓕ	Q57	B-2	Ⓕ
IC13	F-2	Ⓒ	Q58	C-2	Ⓕ
IC14	F-1	Ⓕ	Q59	C-3	Ⓒ
IC15	F-2	Ⓕ	Q60	B-3	Ⓕ
IC16	F-2	Ⓕ	Q61	C-4	Ⓕ
IC18	D-1	Ⓕ	Q62	C-3	Ⓕ
IC19	C-2	Ⓕ	Q63	C-3	Ⓕ
IC20	D-1	Ⓒ	Q64	C-3	Ⓕ
IC21	D-3	Ⓒ	Q65	C-3	Ⓕ
IC22	D-4	Ⓕ	Q66	C-3	Ⓕ
IC23	D-2	Ⓕ	Q67	C-3	Ⓕ
IC24	E-2	Ⓒ	Q68	C-3	Ⓕ
IC25	E-1	Ⓒ	Q69	B-3	Ⓕ
IC26	E-2	Ⓒ	Q70	B-3	Ⓕ
IC26	F-1	Ⓕ	Q501	B-1	Ⓕ
IC27	F-2	Ⓕ	Q502	A-1	Ⓕ
IC28	F-2	Ⓕ	Q503	B-1	Ⓕ
IC29	F-2	Ⓕ	Q504	A-3	Ⓕ
IC30	F-1	Ⓕ	Q505	A-3	Ⓒ
IC51	B-3	Ⓒ	Q506	A-3	Ⓒ
IC52	B-4	Ⓒ	**Switches**		
IC53	C-2	Ⓕ			
IC54	C-3	Ⓕ	SW2	F-1	Ⓒ
IC55	C-2	Ⓒ	SW3	F-2	Ⓒ
IC56	C-3	Ⓒ	**Test Points**		
IC57	A-3	Ⓕ			
IC58	B-4	Ⓕ	TP51	B-3	Ⓒ
IC59	A-3	Ⓕ	TP52	C-4	Ⓒ
IC401	C-1	Ⓕ	TP53	C-1	Ⓒ
IC402	C-1	Ⓕ	TP54	C-3	Ⓒ
IC403	C-1	Ⓕ	TP55	A-3	Ⓒ
IC404	C-1	Ⓒ	TP56	A-4	Ⓒ
IC405	C-1	Ⓒ	TP57	B-3	Ⓒ
IC406	C-1	Ⓕ	TP58	B-3	Ⓒ
IC407	B-2	Ⓕ	TP401	C-1	Ⓒ
IC408	B-1	Ⓕ	TP501	A-2	Ⓒ
IC409	B-1	Ⓕ	TP502	A-2	Ⓒ
IC410	B-2	Ⓕ	TP503	A-2	Ⓒ
IC411	B-2	Ⓒ	TP504	A-3	Ⓒ
IC501	A-1	Ⓒ	TP505	A-3	Ⓒ
IC502	A-1	Ⓕ	TP506	A-4	Ⓒ
IC503	A-1	Ⓕ	TP507	A-3	Ⓒ
IC504	A-1	Ⓕ	TP508	A-3	Ⓒ
IC505	A-1	Ⓒ	TP509	B-2	Ⓒ
IC505	A-1	Ⓕ	TP510	A-1	Ⓒ
IC506	A-2	Ⓒ	TPG51	C-4	Ⓒ
IC507	A-2	Ⓒ	TPG501	A-2	Ⓒ
IC509	A-2	Ⓕ	**Adjustments**		
IC510	B-2	Ⓕ			
IC511	A-2	Ⓕ	VC501	A-1	Ⓒ
IC512	A-3	Ⓕ	VR51	B-2	Ⓒ
IC513	A-3	Ⓕ	VR52	C-1	Ⓒ
IC514	A-2	Ⓕ	VR53	C-3	Ⓒ
IC515	A-2	Ⓕ	VR54	C-2	Ⓒ
IC516	A-3	Ⓒ	VR401	C-1	Ⓒ
IC517	B-2	Ⓒ	VR501	B-2	Ⓒ
IC518	B-2	Ⓕ	VR502	B-1	Ⓒ
IC519	B-1	Ⓒ	VR502	D-1	Ⓕ
IC520	A-2	Ⓒ	VR503	A-3	Ⓒ
IC521	A-1	Ⓒ	VR504	A-2	Ⓒ
IC522	B-1	Ⓒ	VR505	A-2	Ⓒ
IC701	F-3	Ⓕ			
IC702	F-3	Ⓕ			
IC703	E-3	Ⓕ			
IC705	F-3	Ⓕ			

ADDRESS INFORMATION
Ⓒ...COMPONENT SIDE
Ⓕ...FOIL SIDE

VIDEO MOTHER C. B. A.	
Connectors	
CN1	B-3 Ⓒ
CN1	B-7 Ⓕ
CN2	A-2 Ⓒ
CN2	A-8 Ⓕ
CN3	A-3 Ⓒ
CN3	A-7 Ⓕ
P1	A-6 Ⓕ
P2	A-6 Ⓕ
P3	B-2 Ⓒ
P5	A-1 Ⓒ
P5	A-9 Ⓕ
P6	A-1 Ⓒ
P6	A-9 Ⓕ
P9	B-2 Ⓒ
P11	B-6 Ⓕ
P13	B-4 Ⓒ
P13	B-6 Ⓕ
P14	B-4 Ⓒ
P14	B-6 Ⓕ
P15	B-5 Ⓒ
P15	B-5 Ⓕ

ADDRESS INFORMATION
Ⓒ...COMPONENT SIDE
Ⓕ...FOIL SIDE

AUDIO MOTHER C. B. A.	
Connectors	
CN4	A-3 Ⓒ
CN4	A-5 Ⓕ
P207	A-1 Ⓒ
P207	A-6 Ⓕ
P213	A-1 Ⓒ
P213	A-6 Ⓕ
P214	A-1 Ⓒ
P214	A-6 Ⓕ
P1201	A-3 Ⓒ
P1201	A-4 Ⓕ
P1202	A-3 Ⓒ
P1202	A-5 Ⓕ
P1204	A-2 Ⓒ
P1204	A-5 Ⓕ
P1206	A-2 Ⓒ
P1206	A-6 Ⓕ
P1208	A-2 Ⓒ
P1208	A-6 Ⓕ
P1209	A-2 Ⓒ
P1209	A-5 Ⓕ
P1210	A-2 Ⓒ
P1210	A-5 Ⓕ
P1211	A-3 Ⓒ
P1211	A-5 Ⓕ
P1212	A-3 Ⓒ
P1212	A-5 Ⓕ

ADDRESS INFORMATION
Ⓒ...COMPONENT SIDE
Ⓕ...FOIL SIDE

AUDIO MOTHER P.C. BOARD (VEP80736A)

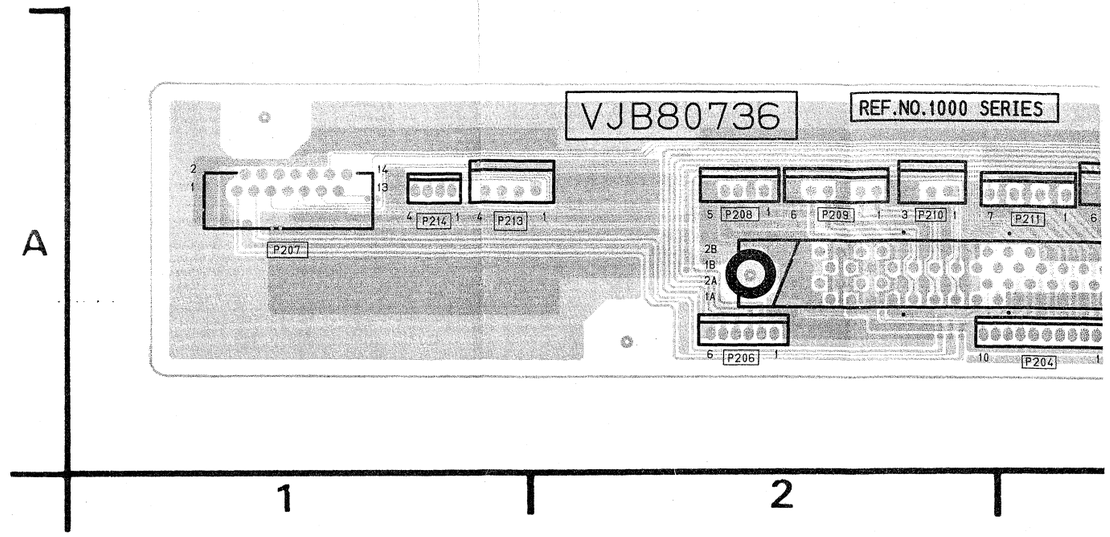

VIDEO MOTHER P.C. BOARD (VEP80735A)

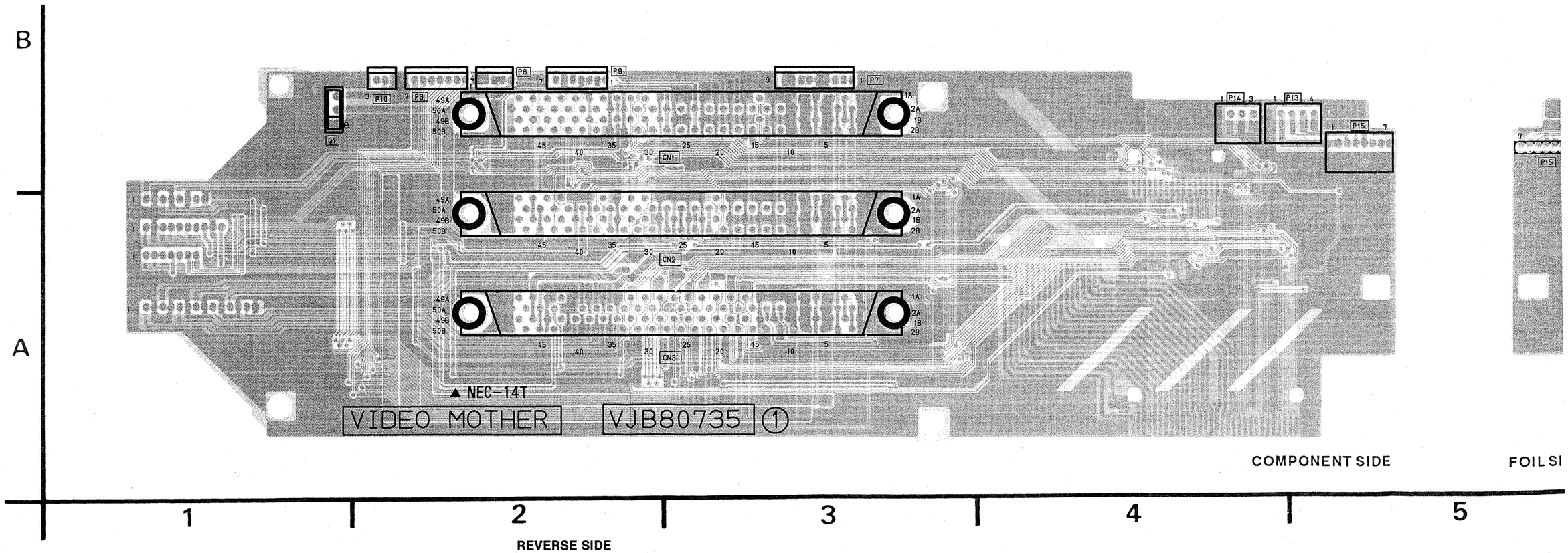

REVERSE SIDE
VIDEO 4

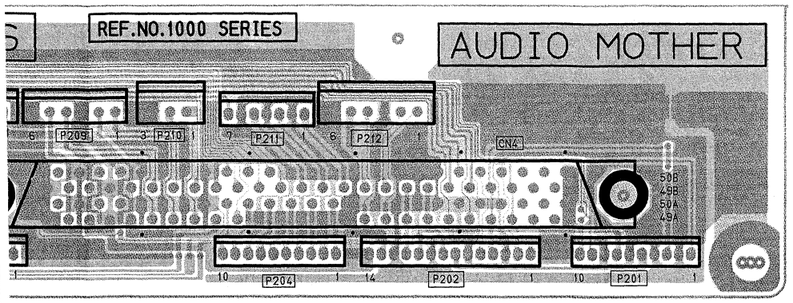

COMPONENT SIDE

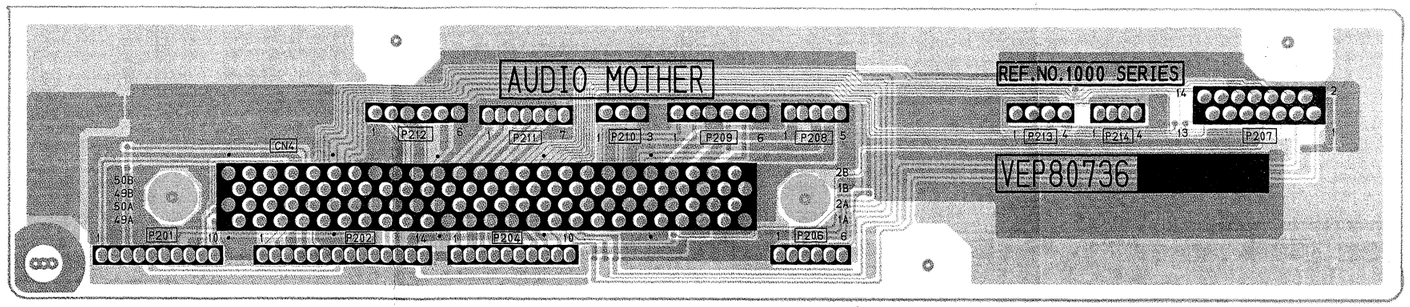

FOIL SIDE

2 3 4 5 6

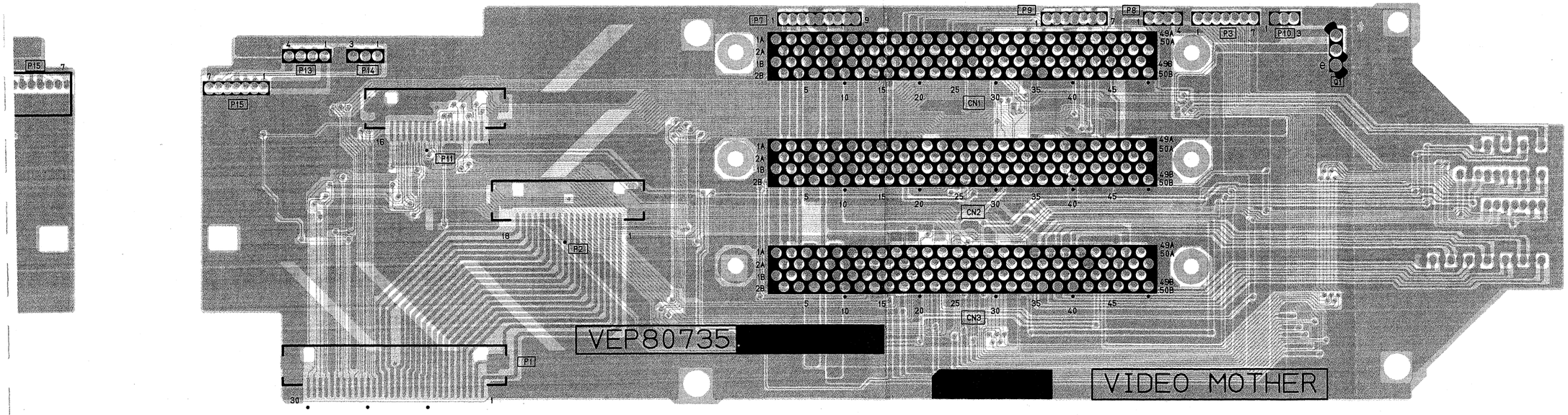

T SIDE

FOIL SIDE

5 6 7 8 9

AUDIO P.C. BOARD (VEP84145A)

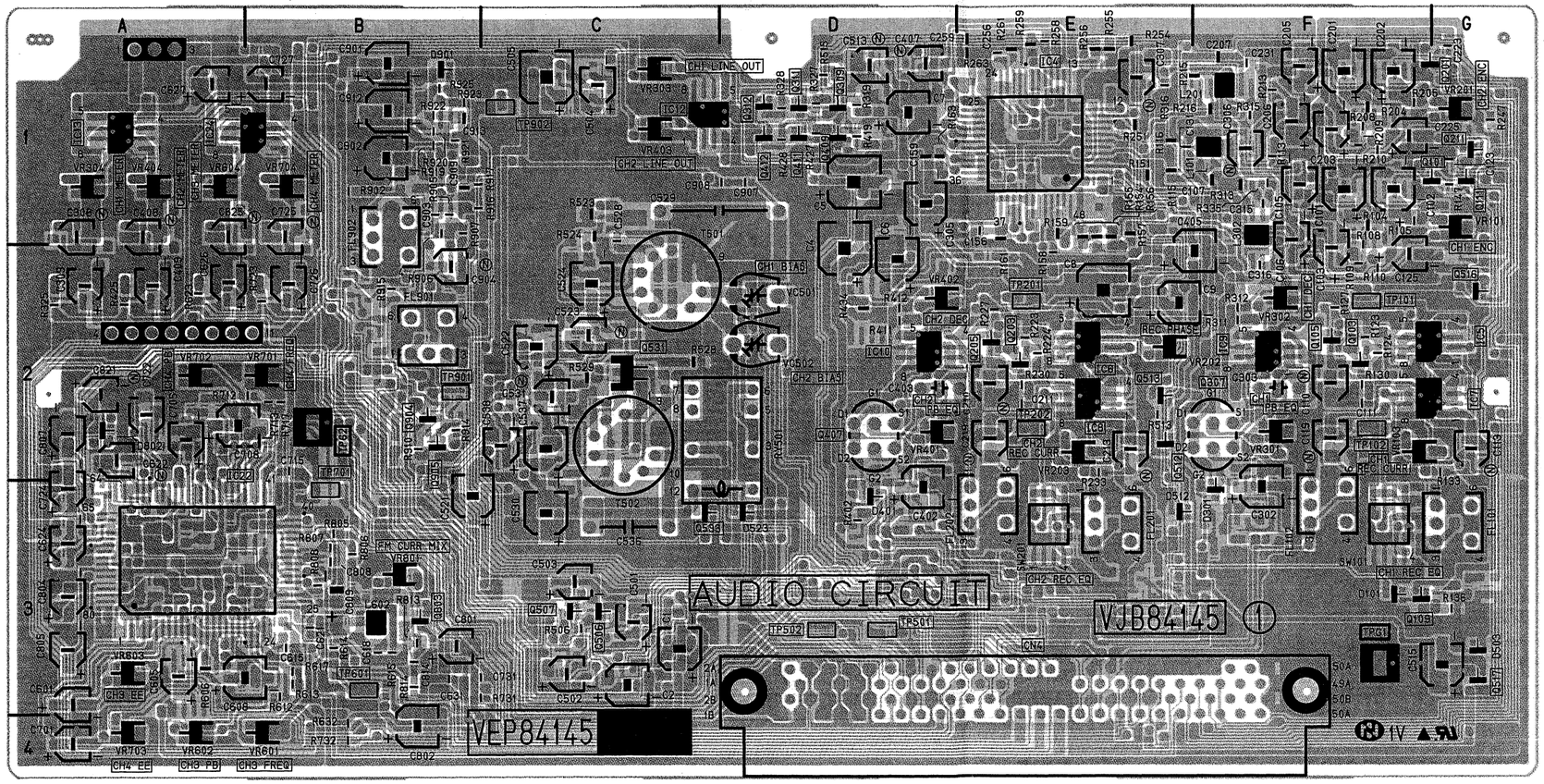

COMPONENT SIDE

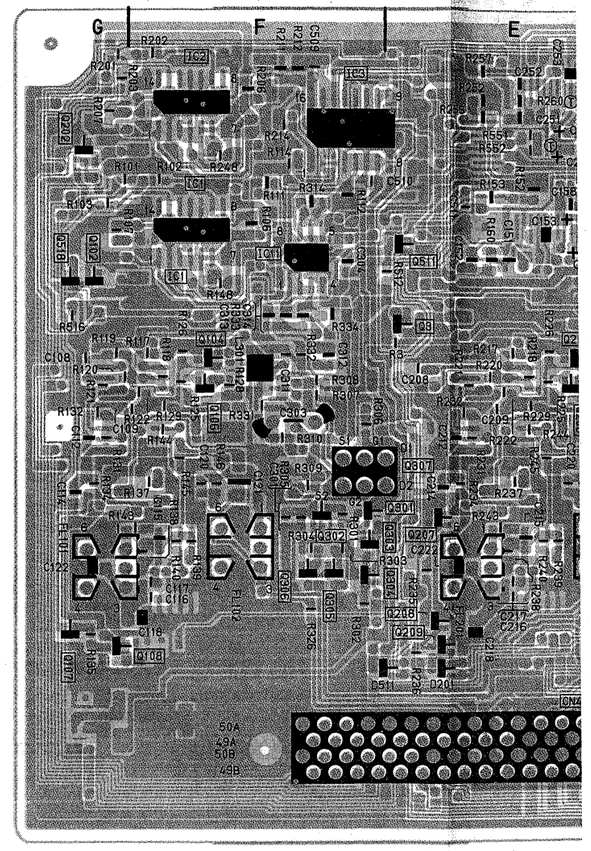

FOIL SIDE

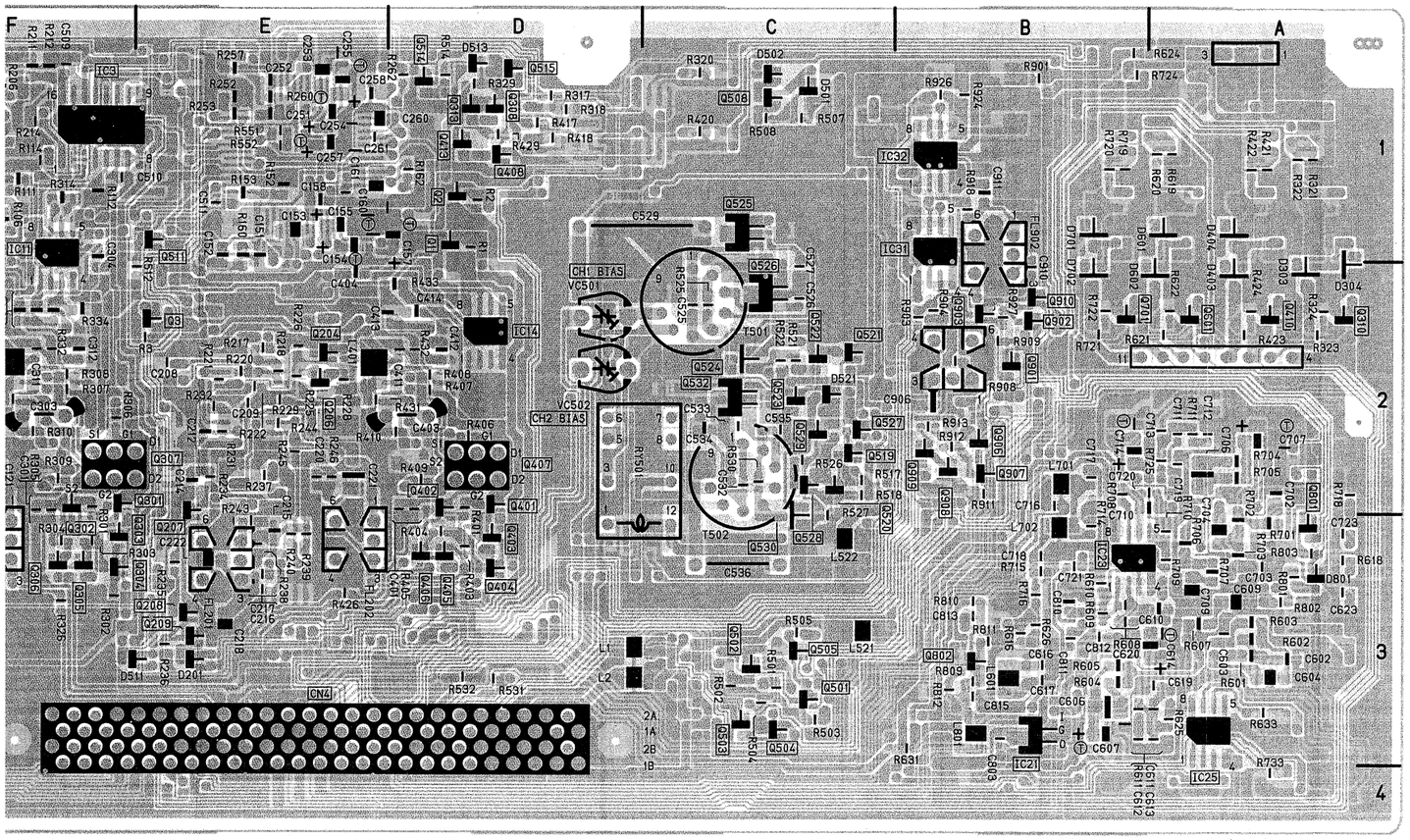

AUDIO C. B. A.

Integrated Circuits		Transistors		Transistors		Transistors		Transistors		Switches		Transformers		Test Points		Test Points		Adjustments		Adjustments	
IC1	F-1 Ⓕ	Q1	D-1 Ⓕ	Q310	A-2 Ⓕ	Q905	B-2 Ⓒ	SW101	F-3 Ⓒ	T501	C-2 Ⓒ	TP101	F-2 Ⓒ	TP701	B-3 Ⓒ	VC501	D-2 Ⓒ	VR303	C-1 Ⓒ
IC2	F-1 Ⓕ	Q2	D-1 Ⓕ	Q311	D-1 Ⓒ	Q906	B-2 Ⓕ	SW201	E-3 Ⓒ	T501	C-2 Ⓕ	TP102	F-2 Ⓒ	TP801	A-2 Ⓕ	VC501	D-2 Ⓕ	VR304	A-1 Ⓒ
IC3	F-1 Ⓕ	Q3	E-2 Ⓕ	Q312	D-1 Ⓒ	Q907	B-2 Ⓕ			T502	C-2 Ⓒ	TP201	E-2 Ⓒ	TP802	B-3 Ⓕ	VC502	D-2 Ⓒ	VR401	D-2 Ⓒ
IC4	E-1 Ⓒ	Q101	G-1 Ⓒ	Q313	D-1 Ⓕ	Q908	B-2 Ⓕ			T502	C-2 Ⓕ	TP202	E-2 Ⓒ	TP803	B-3 Ⓒ	VC502	D-2 Ⓕ	VR402	D-2 Ⓒ
IC5	G-2 Ⓒ	Q102	G-1 Ⓕ	Q401	D-2 Ⓕ	Q909	B-2 Ⓕ					TP501	D-3 Ⓒ	TP901	B-2 Ⓒ	VR101	G-1 Ⓒ	VR403	C-1 Ⓒ
IC6	E-2 Ⓒ	Q103	F-2 Ⓒ	Q402	D-2 Ⓕ	Q910	B-2 Ⓕ					TP502	D-3 Ⓒ	TP902	C-1 Ⓒ	VR103	F-2 Ⓒ	VR404	A-1 Ⓒ
IC7	G-2 Ⓒ	Q104	F-2 Ⓒ	Q403	D-3 Ⓕ							TP601	B-3 Ⓒ	TPG1	F-3 Ⓒ	VR201	G-1 Ⓒ	VR601	B-4 Ⓒ
IC8	E-2 Ⓒ	Q105	F-2 Ⓒ	Q404	D-3 Ⓕ							TP701	B-3 Ⓒ	TPG2	B-2 Ⓒ	VR202	E-2 Ⓒ	VR602	A-4 Ⓒ
IC9	F-2 Ⓒ	Q106	F-2 Ⓕ	Q405	D-3 Ⓕ							TP801	A-2 Ⓕ			VR203	E-2 Ⓒ	VR603	A-3 Ⓒ
IC10	D-2 Ⓒ	Q107	G-3 Ⓕ	Q406	D-3 Ⓕ							TP802	B-3 Ⓒ			VR301	F-2 Ⓒ	VR604	A-1 Ⓒ
IC11	F-1 Ⓒ	Q108	G-3 Ⓕ	Q407	D-2 Ⓒ							TP803	B-3 Ⓒ			VR302	F-2 Ⓒ	VR701	B-2 Ⓒ
IC12	C-1 Ⓒ	Q109	F-3 Ⓒ	Q408	D-2 Ⓕ											VR303	C-1 Ⓒ	VR702	A-2 Ⓒ
IC13	A-1 Ⓒ	Q111	G-1 Ⓒ	Q409	D-1 Ⓕ											VR304	A-1 Ⓒ	VR703	A-4 Ⓒ
IC14	D-2 Ⓕ	Q201	G-1 Ⓒ	Q410	D-1 Ⓒ											VR401	D-2 Ⓒ	VR704	B-1 Ⓒ
IC21	B-3 Ⓕ	Q202	G-1 Ⓕ	Q411	D-1 Ⓒ											VR402	D-2 Ⓒ	VR801	B-3 Ⓒ
IC22	A-3 Ⓒ	Q203	E-2 Ⓒ	Q412	D-1 Ⓒ											VR403	C-1 Ⓒ		
IC23	B-3 Ⓕ	Q204	E-2 Ⓕ	Q413	D-1 Ⓕ											VR404	A-1 Ⓒ		
IC24	B-1 Ⓒ	Q205	E-2 Ⓒ	Q501	C-3 Ⓕ											VR601	B-4 Ⓒ		
IC25	A-3 Ⓕ	Q206	E-2 Ⓕ	Q502	C-3 Ⓕ											VR602	A-4 Ⓒ		
IC31	B-1 Ⓕ	Q207	E-3 Ⓕ	Q503	C-3 Ⓕ											VR603	A-3 Ⓒ		
IC32	B-1 Ⓕ	Q208	E-3 Ⓕ	Q504	C-3 Ⓕ											VR604	A-1 Ⓒ		
		Q209	E-3 Ⓕ	Q505	C-3 Ⓕ											VR701	B-2 Ⓒ		
		Q211	G-1 Ⓒ	Q506	C-3 Ⓒ											VR702	A-2 Ⓒ		
		Q301	F-2 Ⓕ	Q507	C-3 Ⓒ											VR703	A-4 Ⓒ		
		Q302	F-3 Ⓕ	Q508	C-1 Ⓕ											VR704	B-1 Ⓒ		
		Q303	F-3 Ⓕ	Q511	E-1 Ⓕ											VR801	B-3 Ⓒ		
		Q304	F-3 Ⓕ	Q512	E-2 Ⓒ														
		Q305	F-3 Ⓕ	Q513	E-2 Ⓒ														
		Q306	F-3 Ⓕ	Q514	D-1 Ⓕ														
		Q307	F-2 Ⓒ	Q515	D-1 Ⓕ														
		Q307	F-2 Ⓕ	Q516	G-2 Ⓒ														
		Q308	D-1 Ⓕ	Q517	G-3 Ⓒ														
		Q309	D-1 Ⓒ	Q518	G-1 Ⓕ														
				Q519	C-2 Ⓕ														
				Q520	C-2 Ⓕ														
				Q521	C-2 Ⓕ														
				Q522	C-2 Ⓕ														
				Q523	C-2 Ⓕ														
				Q524	C-2 Ⓕ														
				Q525	C-1 Ⓕ														
				Q526	C-2 Ⓕ														
				Q527	C-2 Ⓕ														
				Q528	C-3 Ⓕ														
				Q529	C-2 Ⓕ														
				Q530	C-3 Ⓕ														
				Q531	C-2 Ⓒ														
				Q532	C-2 Ⓕ														
				Q533	C-3 Ⓒ														
				Q601	A-2 Ⓕ														
				Q701	B-2 Ⓕ														
				Q801	A-2 Ⓕ														
				Q802	B-3 Ⓕ														
				Q803	B-3 Ⓒ														
				Q901	B-2 Ⓕ														
				Q902	B-2 Ⓕ														
				Q903	B-2 Ⓕ														
				Q904	B-2 Ⓒ														

ADDRESS INFORMATION
Ⓒ...COMPONENT SIDE
Ⓕ...FOIL SIDE

CIRCUIT BOARD LOCATION

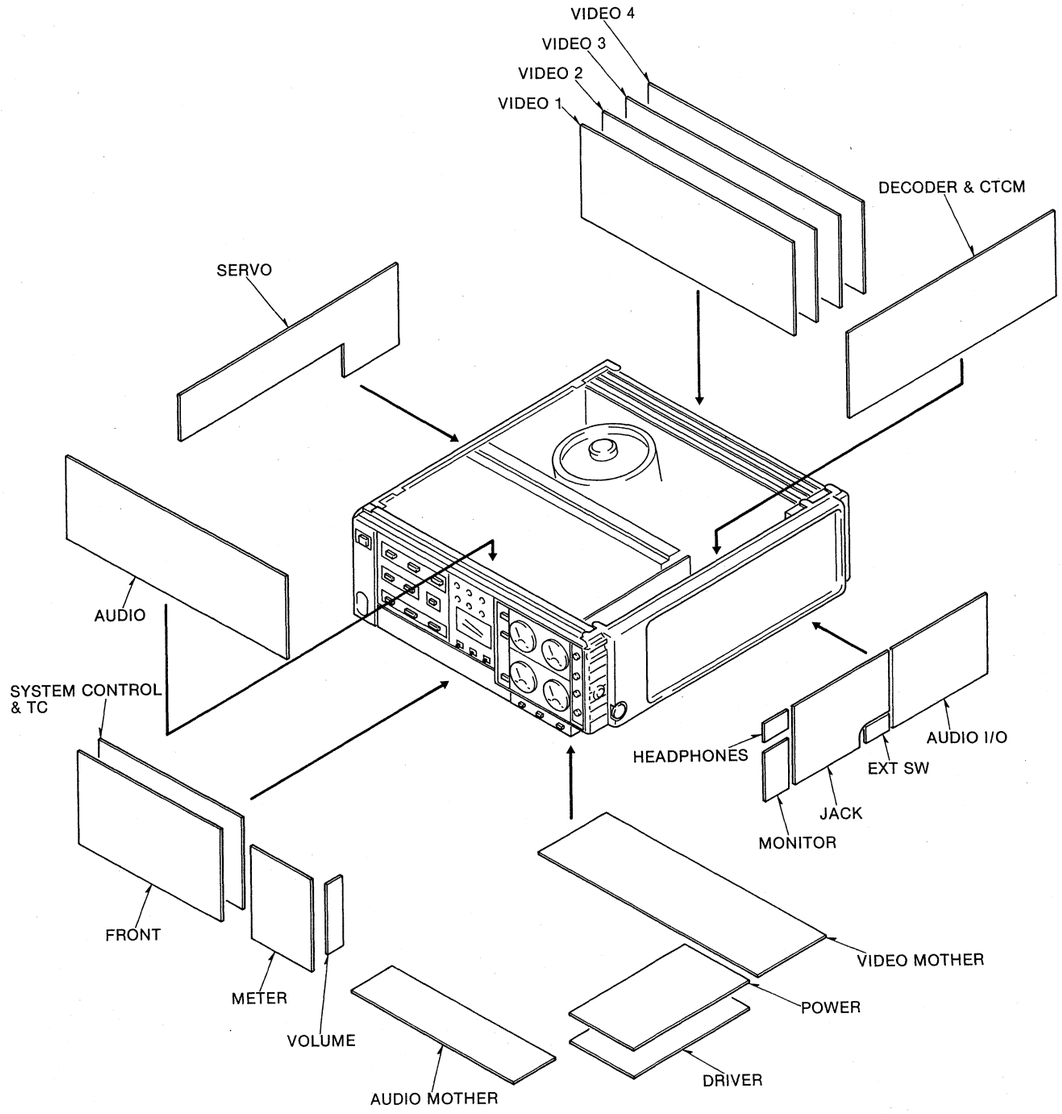

AUDIO I/O C. B. A.		
Integrated Circuits		
IC1001	A-3	©
IC1002	A-2	©
IC1003	B-3	©
IC1004	B-4	Ⓕ
IC1005	B-2	©
IC1006	B-2	©
IC1007	B-5	Ⓕ
IC1008	B-1	©
IC1009	A-4	Ⓕ
IC1010	A-2	©
IC1011	A-4	Ⓕ
IC1012	A-5	Ⓕ
IC1013	A-5	Ⓕ
IC1014	A-5	Ⓕ
Connectors		
P1221	A-3	©
P1221	A-3	Ⓕ
P1222	A-3	©
P1222	A-3	Ⓕ
P1223	A-2	©
P1223	A-4	Ⓕ
P1225	B-1	©
P1225	B-5	Ⓕ
P1226	B-2	©
P1226	B-4	Ⓕ
P1227	B-2	©
P1227	B-4	Ⓕ
P1228	B-3	©
P1228	B-3	Ⓕ
P1229	A-2	©
P1229	A-4	Ⓕ
P1230	A-1	©
P1230	A-5	Ⓕ
Transistors		
Q1001	B-1	©
Q1002	A-1	©
Q1021	B-5	Ⓕ
Q1501	B-2	©
Q1502	B-2	©
Q1601	B-1	©
Q1602	B-1	©
Switches		
SW1001	B-3	©
SW1001	B-3	Ⓕ
SW1002	B-2	©
SW1002	B-4	Ⓕ
SW1003	B-2	©
SW1003	B-4	Ⓕ
SW1004	B-1	©
SW1004	B-5	Ⓕ
SW1005	B-3	©
SW1005	B-3	Ⓕ
SW1006	B-2	©
SW1006	B-4	Ⓕ
SW1007	B-2	©
SW1007	B-4	Ⓕ
SW1008	B-1	©
SW1008	B-5	Ⓕ
SW1009	A-3	©
SW1009	A-3	Ⓕ
SW1010	A-2	©
SW1010	A-4	Ⓕ
SW1011	A-3	©
SW1011	A-3	Ⓕ
SW1012	A-2	©
SW1012	A-4	Ⓕ

ADDRESS INFORMATION
©... COMPONENT SIDE
Ⓕ... FOIL SIDE

AUDIO I/O P.C. BOARD (VEP84147A) FOR
(VEP84147B) FOR

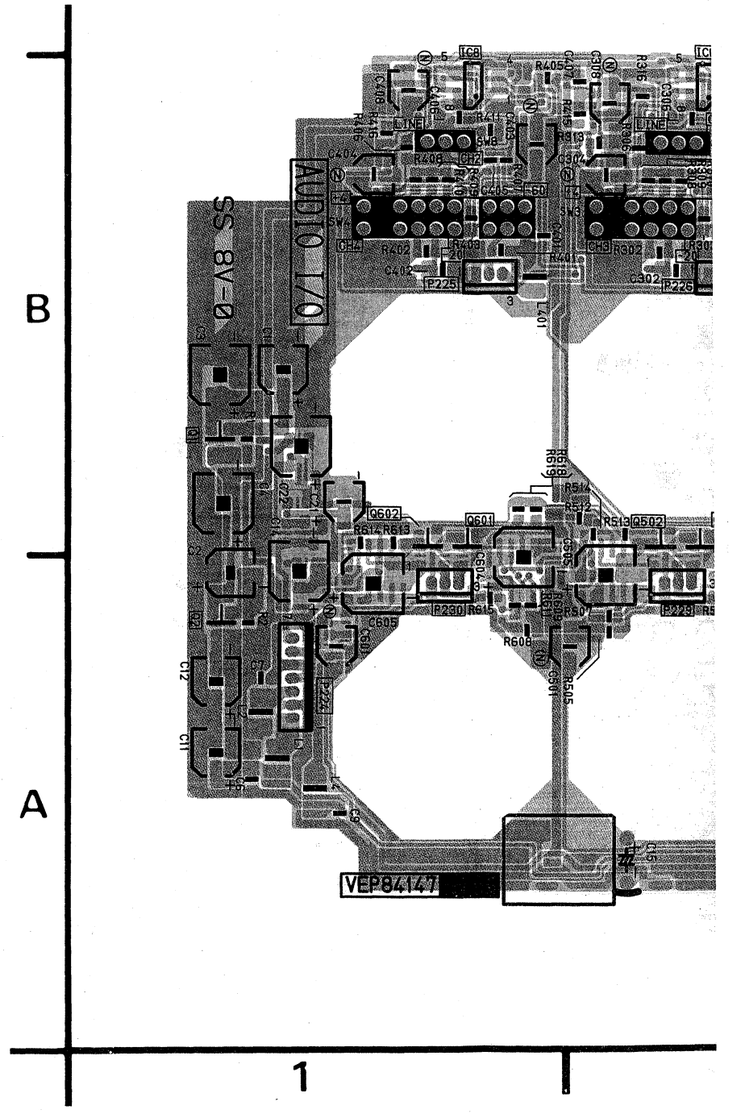

REVERSE SIDE
AUDIO

)ARD (VEP84147A) FOR NTSC
(VEP84147B) FOR PAL

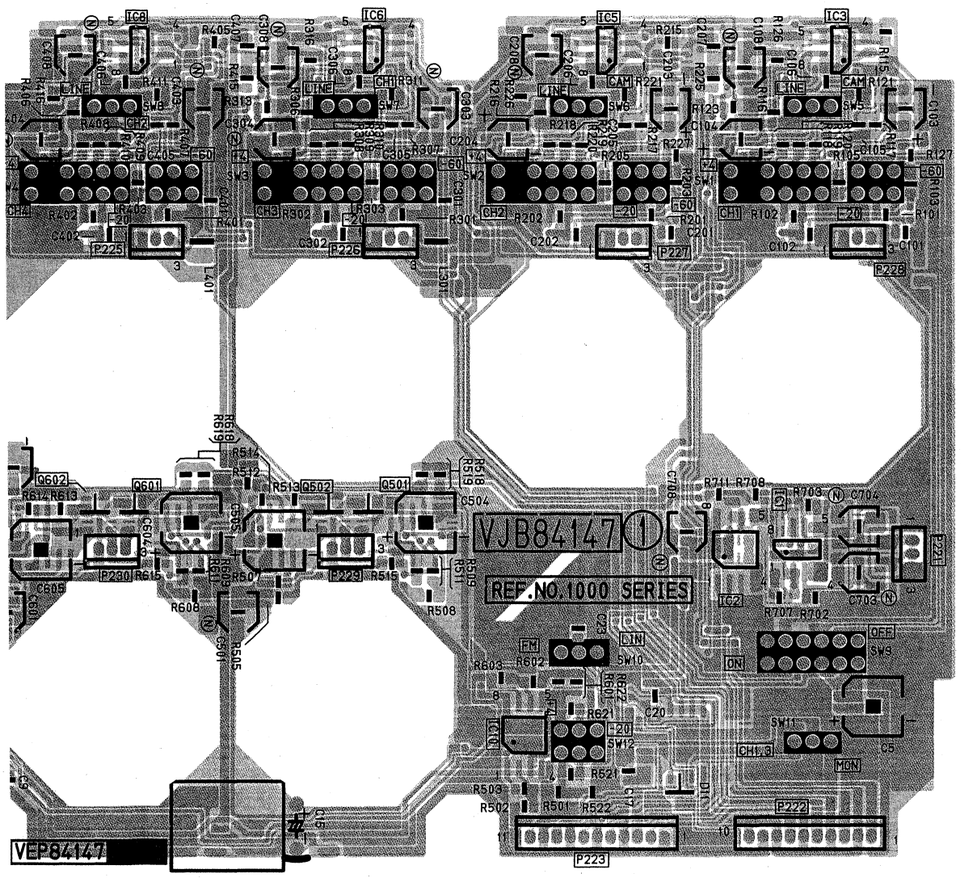

COMPONENT SIDE

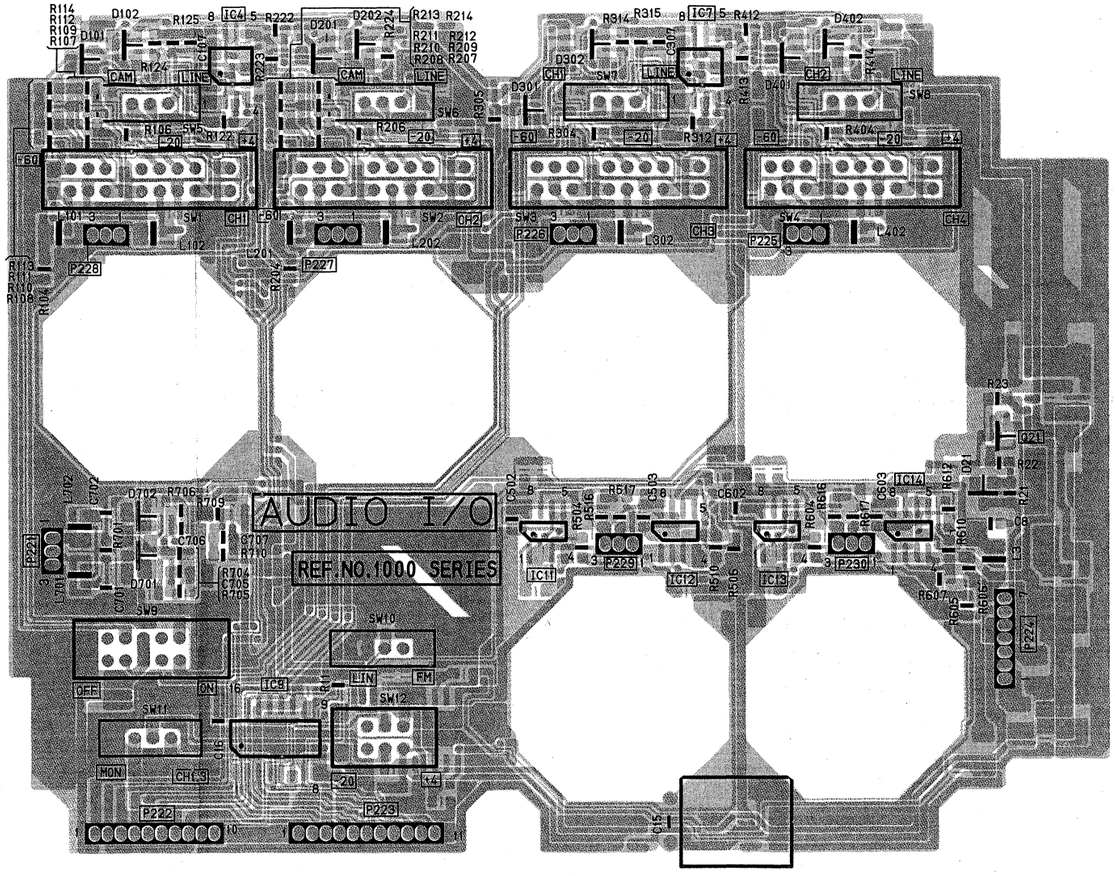

FOIL SIDE

METER P.C. BOARD (VEP80737A)/METER SELECT P.C. BOARD (VEP80738A)/MONITOR P.C. BOARD (VEP84148A)/MONITOR VR P.C. B

C

B

A

1 2 3 4 5

METER SELECT P.C. BOARD (VEP80738A)

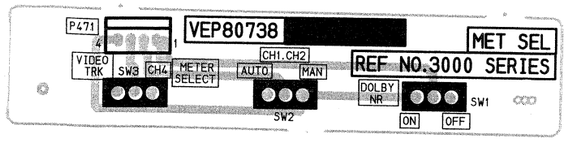

MONITOR VR P.C. BOARD (VEP80776A)

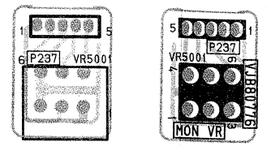

COMPONENT SIDE FOIL SIDE

METER P.C. BOARD (VEP80737A)

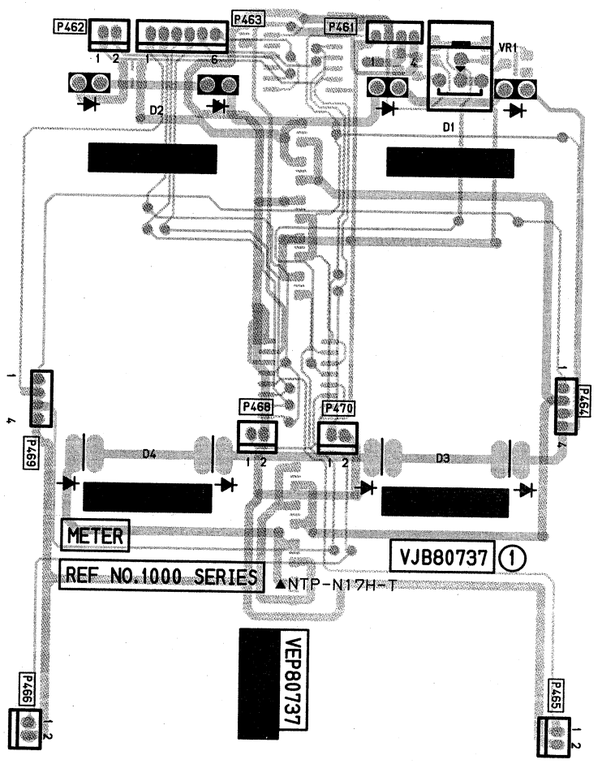

COMPONENT SIDE

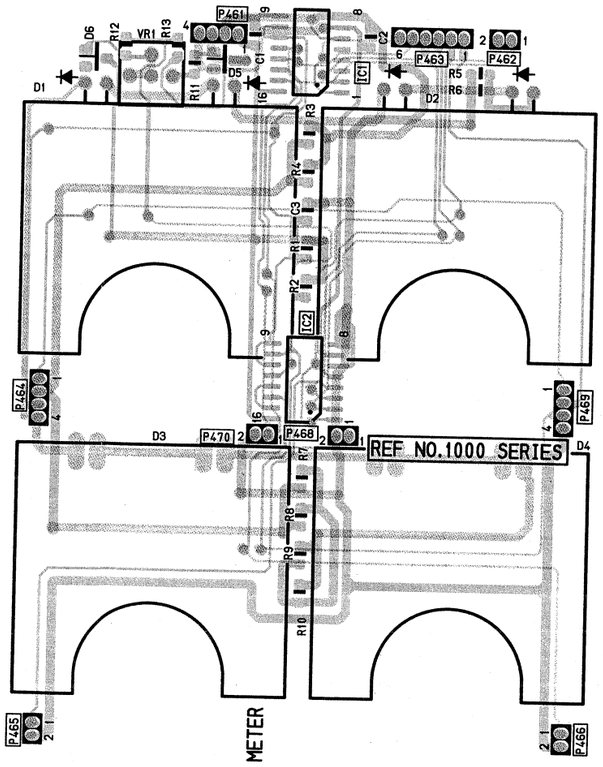

FOIL SIDE

MONITOR P.C. BOARD (VEP84148A)

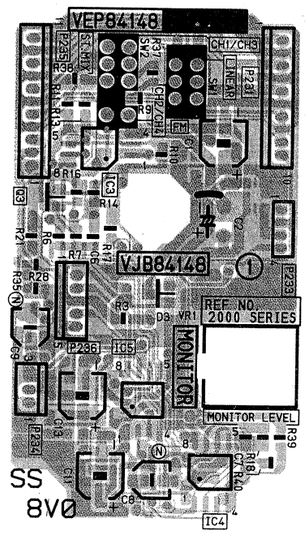

COMPONENT SIDE

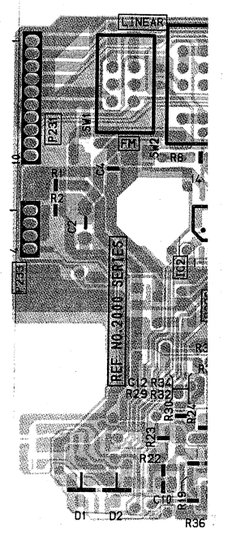

FOIL SIDE

(VEP84148A)/MONITOR VR P.C. BOARD (VEP80776A)

MONITOR VR P.C. BOARD (VEP80776A)

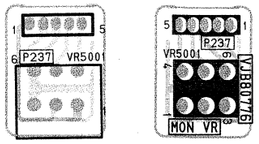

COMPONENT SIDE FOIL SIDE

MONITOR C. B. A.		
Integrated Circuits		
IC2002	A-5	Ⓕ
IC2003	B-4	Ⓕ
IC2004	A-4	Ⓒ
IC2005	A-4	Ⓒ
Connectors		
P231	B-5	Ⓒ
P231	B-5	Ⓕ
P234	A-4	Ⓒ
P234	A-5	Ⓕ
P235	B-4	Ⓒ
P235	B-5	Ⓕ
P236	A-4	Ⓒ
P236	A-5	Ⓕ
Transistors		
Q2001	A-5	Ⓕ
Q2002	A-5	Ⓕ
Q2003	B-4	Ⓕ
Switches		
SW2001	B-4	Ⓒ
SW2001	B-5	Ⓕ
SW2002	B-4	Ⓒ
SW2002	B-5	Ⓕ

ADDRESS INFORMATION
Ⓒ...COMPONENT SIDE
Ⓕ...FOIL SIDE

MONITOR P.C. BOARD (VEP84148A)

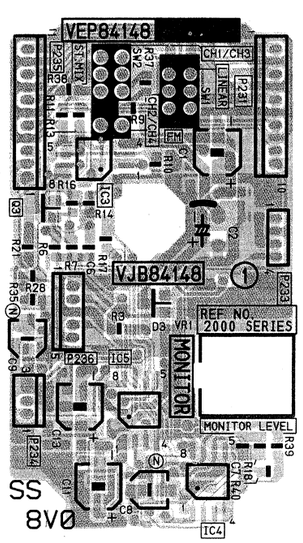

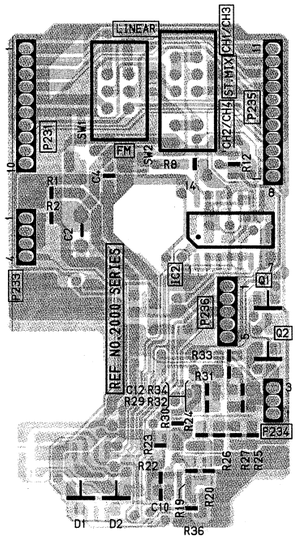

COMPONENT SIDE FOIL SIDE

VOLUME P.C. BOARD (VEP80734A)/HEADPHONES P.C. BOARD (VEP841
JACK VR P.C. BOARD (VEP80777A)/EXT SW P.C. BOARD (VEP80780A)

HEADPHONES P.C. BOARD (VEP84146A)

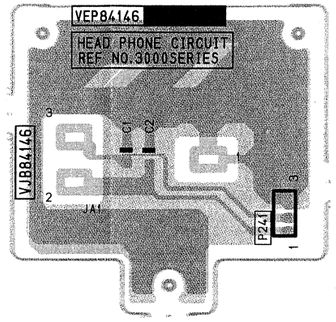

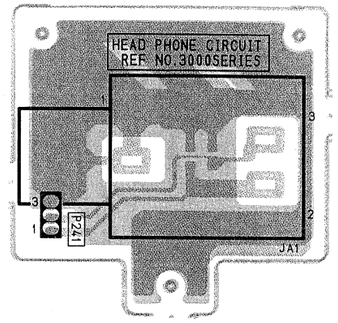

COMPONENT SIDE FOIL SIDE

VOLUME P.C. BOARD (VEP80734A)

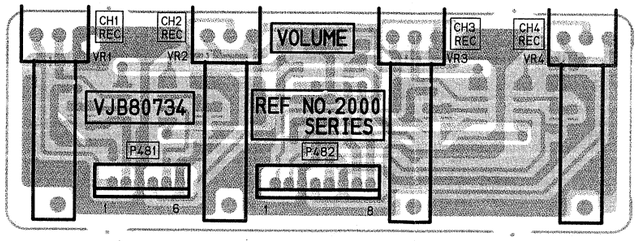

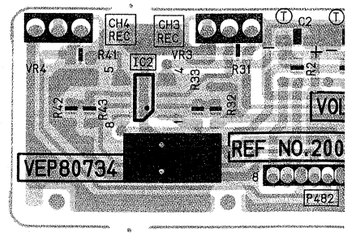

COMPONENT SIDE FOIL SIDE

VOLUME P.C. BOARD (VEP80734A)/ HEADPHONES P.C. BOARD (VEP84146A)/ JACK VR P.C. BOARD (VEP80777A)/ EXT SW P.C. BOARD (VEP80780A)

HEADPHONES P.C. BOARD (VEP84146A)

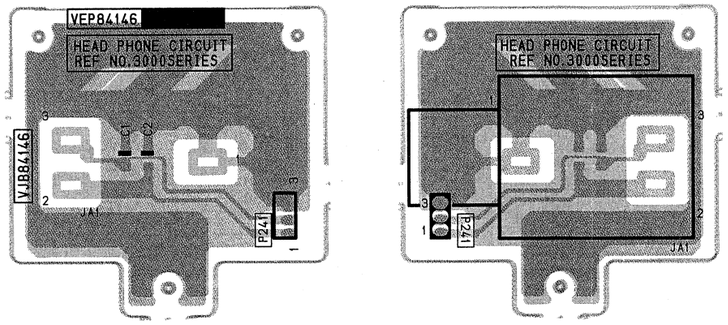

COMPONENT SIDE FOIL SIDE

JACK VR P.C. BOARD (VEP80777A)

VOLUME P.C. BOARD (VEP80734A)

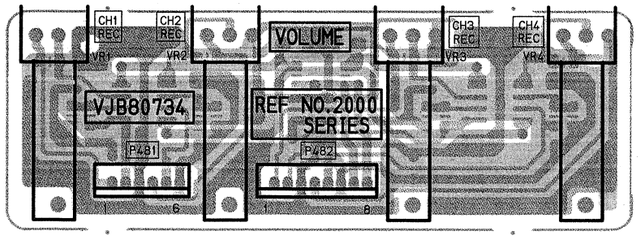

COMPONENT SIDE

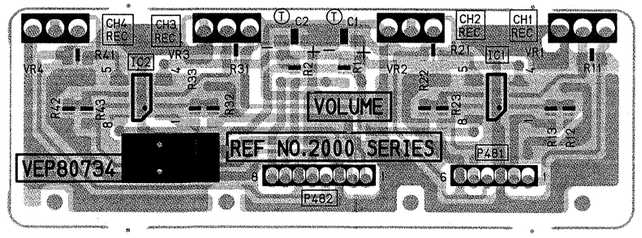

FOIL SIDE

EXT SW P.C. BOARD (VEP80780A)

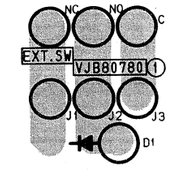

SERVO P.C. BOARD (VEP82087A) FOR NTSC
(VEP82087B) FOR PAL

Integrated Circuits							
IC1	B-2	Ⓕ	IC27	F-3	Ⓕ	P502	B-
IC2	B-2	Ⓕ	IC28	F-3	Ⓒ	P502	B-
IC3	H-1	Ⓕ	IC29	G-3	Ⓒ	P503	C-
IC4	B-3	Ⓕ	IC30	G-3	Ⓕ	P503	C-
IC5	D-2	Ⓒ	IC31	G-3	Ⓒ	P504	I-1
IC6	C-3	Ⓕ	IC32	G-3	Ⓒ	P505	H-
IC7	H-1	Ⓒ	IC34	G-2	Ⓒ	P505	H-
IC8	B-2	Ⓕ	IC36	G-2	Ⓕ	P506	F-2
IC9	F-2	Ⓕ	IC37	G-3	Ⓕ	P506	F-2
IC10	F-2	Ⓒ	IC38	G-2	Ⓕ	P507	G-2
IC11	D-3	Ⓕ	IC39	I-3	Ⓒ	P507	G-2
IC12	D-3	Ⓕ	IC40	I-3	Ⓕ	P510	A-2
IC13	D-2	Ⓕ	IC41	H-2	Ⓕ	P511	G-2
IC14	G-2	Ⓕ	IC42	D-2	Ⓕ	P511	G-2
IC15	F-2	Ⓕ	IC43	C-2	Ⓕ	P513	H-2
IC16	F-2	Ⓕ	IC44	F-2	Ⓒ	P513	H-2
IC17	A-3	Ⓕ	IC45	E-2	Ⓕ	**Transistors**	
IC18	A-2	Ⓕ	IC306	I-1	Ⓒ	Q1	B-2
IC19	I-1	Ⓕ	IC311	I-1	Ⓕ	Q2	B-2
IC20	A-2	Ⓕ	IC312	I-1	Ⓕ	Q3	C-2
IC21	A-2	Ⓕ	IC313	I-1	Ⓕ	Q4	B-2
IC22	D-3	Ⓒ	IC314	I-2	Ⓕ	Q5	B-2
IC23	A-3	Ⓒ	IC315	H-2	Ⓒ	Q6	C-3
IC24	A-2	Ⓕ	IC316	H-2	Ⓒ	Q7	C-3
IC25	C-2	Ⓒ	**Connectors**			Q8	C-3
IC26	A-2	Ⓒ	P501	A-2	Ⓒ	Q9	A-1
			P501	A-2	Ⓕ	Q10	F-3

ADDRESS INFORMATION
Ⓒ...COMPONENT SIDE
Ⓕ...FOIL SIDE

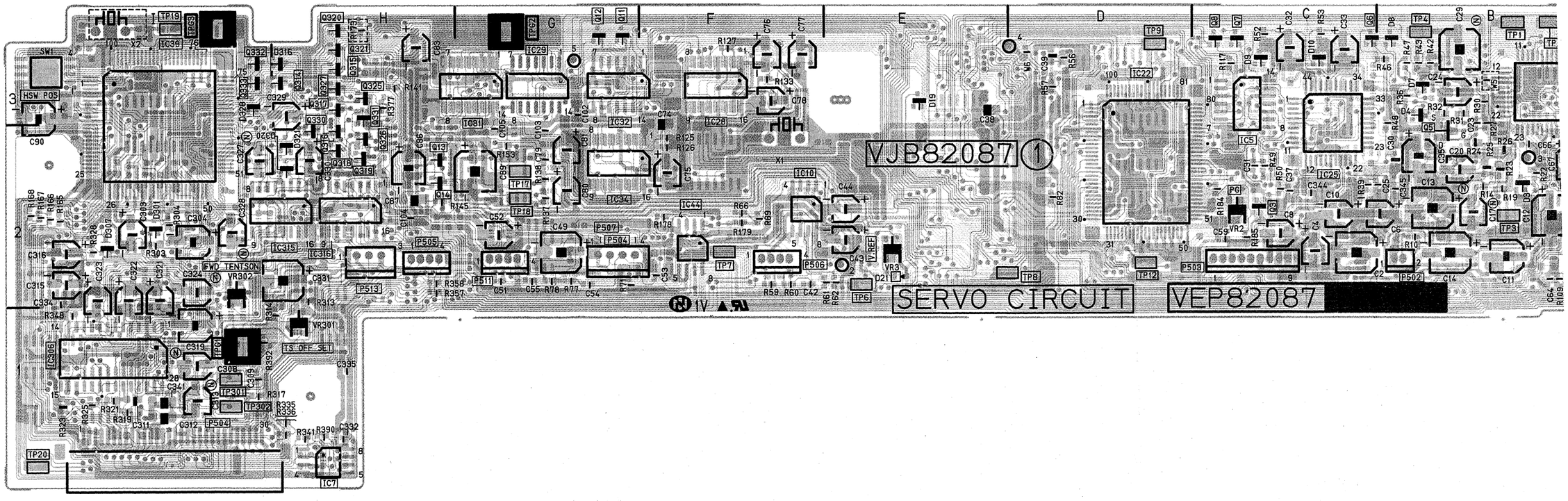

SERVO C. B. A.

Integrated Circuits	
IC1	B-2 Ⓕ
IC2	B-2 Ⓕ
IC3	H-1 Ⓕ
IC4	B-3 Ⓕ
IC5	D-2 Ⓒ
IC6	C-3 Ⓕ
IC7	H-1 Ⓒ
IC8	B-2 Ⓕ
IC9	F-2 Ⓕ
IC10	F-2 Ⓒ
IC11	D-3 Ⓕ
IC12	D-3 Ⓕ
IC13	D-2 Ⓕ
IC14	G-2 Ⓕ
IC15	F-2 Ⓕ
IC16	F-2 Ⓕ
IC17	A-3 Ⓕ
IC18	A-2 Ⓕ
IC19	I-1 Ⓕ
IC20	A-2 Ⓕ
IC21	A-2 Ⓕ
IC22	D-3 Ⓒ
IC23	A-3 Ⓒ
IC24	A-2 Ⓕ
IC25	C-2 Ⓒ
IC26	A-2 Ⓒ
IC27	F-3 Ⓕ
IC28	F-3 Ⓒ
IC29	G-3 Ⓒ
IC30	G-3 Ⓕ
IC31	G-3 Ⓒ
IC32	G-3 Ⓒ
IC34	G-2 Ⓒ
IC36	G-2 Ⓕ
IC37	G-3 Ⓕ
IC38	G-2 Ⓕ
IC39	I-3 Ⓒ
IC40	I-3 Ⓕ
IC41	H-2 Ⓕ
IC42	D-2 Ⓕ
IC43	C-2 Ⓕ
IC44	F-2 Ⓒ
IC45	E-2 Ⓕ
IC306	I-1 Ⓒ
IC311	I-1 Ⓕ
IC312	I-1 Ⓕ
IC313	I-1 Ⓕ
IC314	I-2 Ⓕ
IC315	H-2 Ⓒ
IC316	H-2 Ⓒ

Connectors	
P501	A-2 Ⓒ
P501	A-2 Ⓕ
P502	B-2 Ⓒ
P502	B-2 Ⓕ
P503	C-2 Ⓒ
P503	C-2 Ⓕ
P504	I-1 Ⓒ
P505	H-2 Ⓒ
P505	H-2 Ⓕ
P506	F-2 Ⓒ
P506	F-2 Ⓕ
P507	G-2 Ⓒ
P507	G-2 Ⓕ
P510	A-2 Ⓒ
P511	G-2 Ⓒ
P511	G-2 Ⓕ
P513	H-2 Ⓒ
P513	H-2 Ⓕ

Transistors	
Q1	B-2 Ⓕ
Q2	B-2 Ⓕ
Q3	C-2 Ⓕ
Q4	B-2 Ⓕ
Q5	B-2 Ⓒ
Q6	C-3 Ⓒ
Q7	C-3 Ⓒ
Q8	C-3 Ⓒ
Q9	A-1 Ⓕ
Q10	F-3 Ⓕ
Q11	G-3 Ⓒ
Q12	G-3 Ⓒ
Q13	H-2 Ⓒ
Q14	H-3 Ⓒ
Q15	C-2 Ⓕ
Q301	I-2 Ⓕ
Q302	I-2 Ⓕ
Q303	I-2 Ⓕ
Q304	I-2 Ⓕ
Q305	I-1 Ⓕ
Q306	I-1 Ⓕ
Q307	I-1 Ⓕ
Q308	I-1 Ⓕ
Q309	I-1 Ⓕ
Q310	I-2 Ⓕ
Q311	I-2 Ⓕ
Q312	I-2 Ⓕ
Q313	I-2 Ⓕ
Q314	H-3 Ⓒ
Q315	H-3 Ⓒ
Q318	H-2 Ⓒ
Q319	H-2 Ⓒ
Q320	H-3 Ⓒ
Q321	H-3 Ⓒ
Q322	I-2 Ⓕ
Q323	I-2 Ⓕ
Q324	H-2 Ⓕ
Q325	H-3 Ⓒ
Q326	H-2 Ⓒ
Q327	H-3 Ⓒ
Q328	I-2 Ⓕ
Q329	I-2 Ⓕ
Q330	H-2 Ⓒ
Q331	H-2 Ⓒ
Q332	I-3 Ⓒ
Q333	I-3 Ⓒ
Q334	I-2 Ⓕ

Switch	
SW1	I-3 Ⓒ

Test Points	
TP1	B-3 Ⓒ
TP3	B-2 Ⓒ
TP4	B-3 Ⓒ
TP6	E-2 Ⓒ
TP7	F-2 Ⓒ
TP8	D-2 Ⓒ
TP9	D-3 Ⓒ
TP10	A-2 Ⓒ
TP12	D-2 Ⓒ
TP14	B-3 Ⓒ
TP17	G-2 Ⓒ
TP18	G-2 Ⓒ
TP19	I-3 Ⓒ
TP20	I-1 Ⓒ
TP301	I-1 Ⓒ
TP302	I-1 Ⓒ
TPG1	I-1 Ⓒ
TPG2	G-3 Ⓒ
TPG3	I-3 Ⓒ

Adjustments	
VR1	A-2 Ⓒ
VR2	C-2 Ⓒ
VR3	E-2 Ⓒ
VR301	H-1 Ⓒ
VR302	I-2 Ⓒ

ADDRESS INFORMATION
Ⓒ... COMPONENT SIDE
Ⓕ... FOIL SIDE

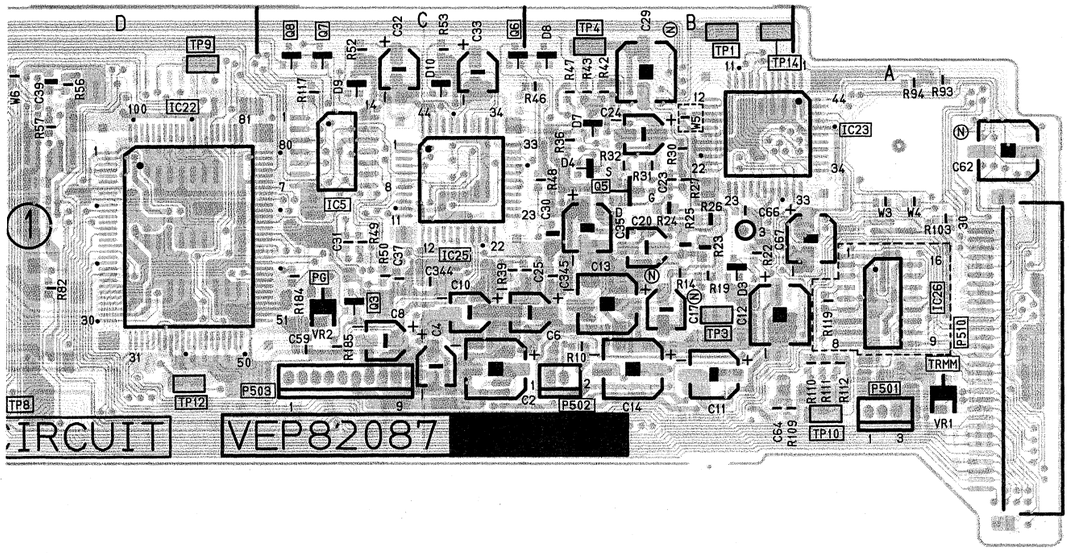

COMPONENT SIDE

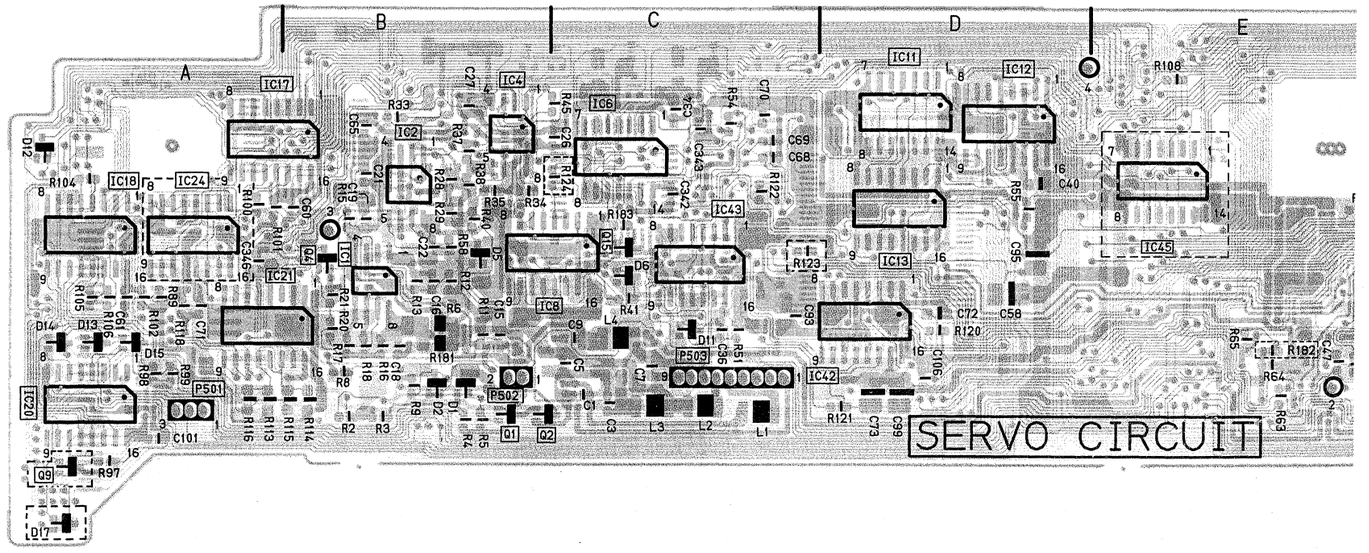

FOIL SIDE

I-1	©
I-1	©
I-1	©
G-3	©
I-3	©

A-2	©
C-2	©
E-2	©
H-1	©
I-2	©

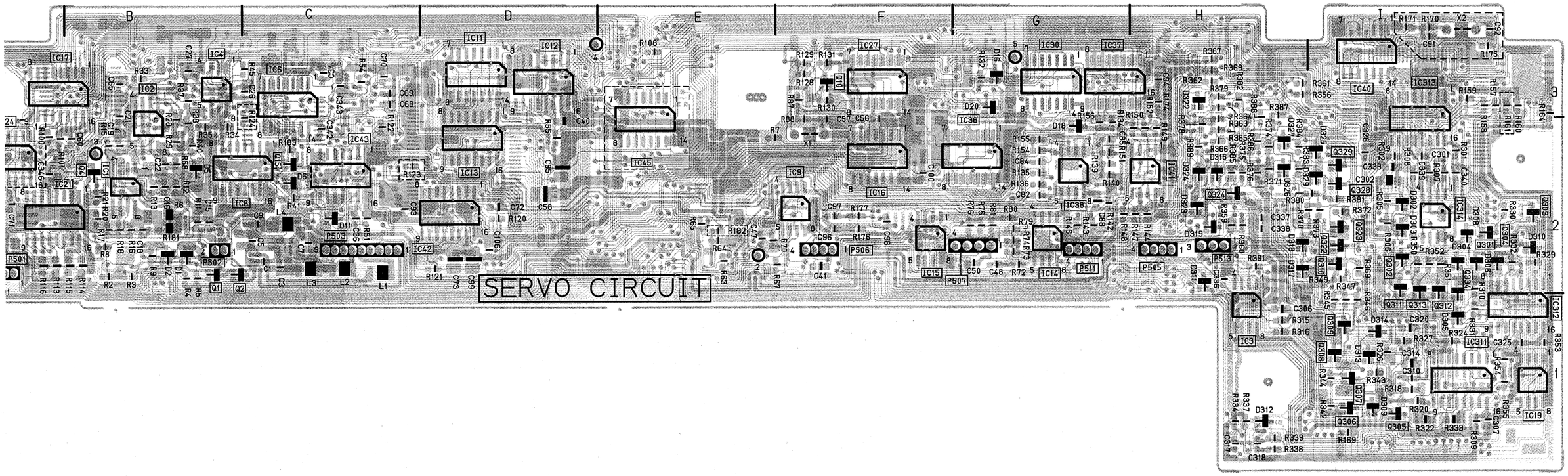

DRIVER P.C. BOARD (VEP82088A)

DRIVER C. B. A.					
Integrated Circuits		P1515	D-3 Ⓒ	Q1101	E-1 Ⓕ
IC1001	B-1 Ⓒ	P1515	D-3 Ⓕ	Q1102	B-2 Ⓒ
IC1001	B-1 Ⓕ	P1517	E-3 Ⓒ	Q1102	B-2 Ⓕ
IC1002	C-1 Ⓒ	P1517	E-3 Ⓕ	Q1103	B-2 Ⓕ
IC1002	C-1 Ⓕ	P1518	A-2 Ⓒ	Q1104	E-1 Ⓕ
IC1003	D-3 Ⓒ	P1518	A-2 Ⓕ	Q1105	E-1 Ⓕ
IC1003	D-3 Ⓕ	P1801	C-3 Ⓒ	Q1106	E-1 Ⓕ
IC1004	C-3 Ⓒ	P1801	C-3 Ⓕ	Q1107	D-1 Ⓕ
IC1004	C-3 Ⓕ	P1805	E-2 Ⓒ	Q1108	D-1 Ⓕ
IC1005	E-3 Ⓒ	P1805	E-2 Ⓕ	Q1109	D-1 Ⓕ
IC1005	E-3 Ⓕ	P1806	A-3 Ⓒ	Q1110	B-2 Ⓕ
IC1006	B-3 Ⓒ	P1806	A-3 Ⓕ	**Test Points**	
IC1007	B-3 Ⓕ	P1807	A-1 Ⓒ	TP1001	C-3 Ⓒ
IC1101	E-1 Ⓒ	P1807	A-1 Ⓕ	TP1001	C-3 Ⓕ
IC1101	E-1 Ⓕ	P1808	E-1 Ⓒ	TPG1001	A-2 Ⓒ
IC1102	B-2 Ⓕ	P1808	E-1 Ⓕ	TPG1001	A-2 Ⓕ
IC1103	E-2 Ⓒ	**Transistors**			
IC1103	E-2 Ⓕ	Q1001	C-1 Ⓕ		
IC1104	D-2 Ⓕ	Q1002	D-3 Ⓕ		
Connectors		Q1003	C-3 Ⓕ		
P1503	B-3 Ⓒ	Q1004	B-3 Ⓕ		
P1503	B-3 Ⓕ	Q1005	B-2 Ⓕ		

ADDRESS INFORMATION
Ⓒ... COMPONENT SIDE
Ⓕ... FOIL SIDE

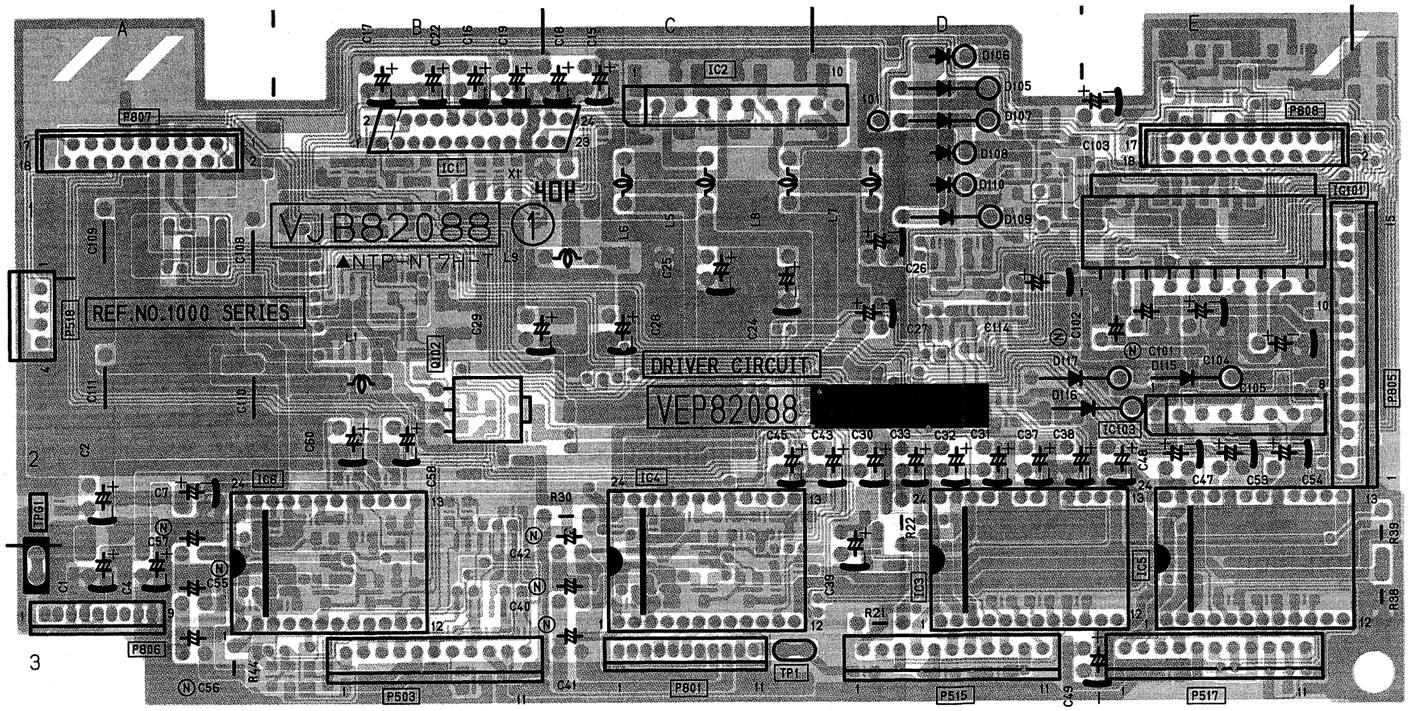

COMPONENT SIDE

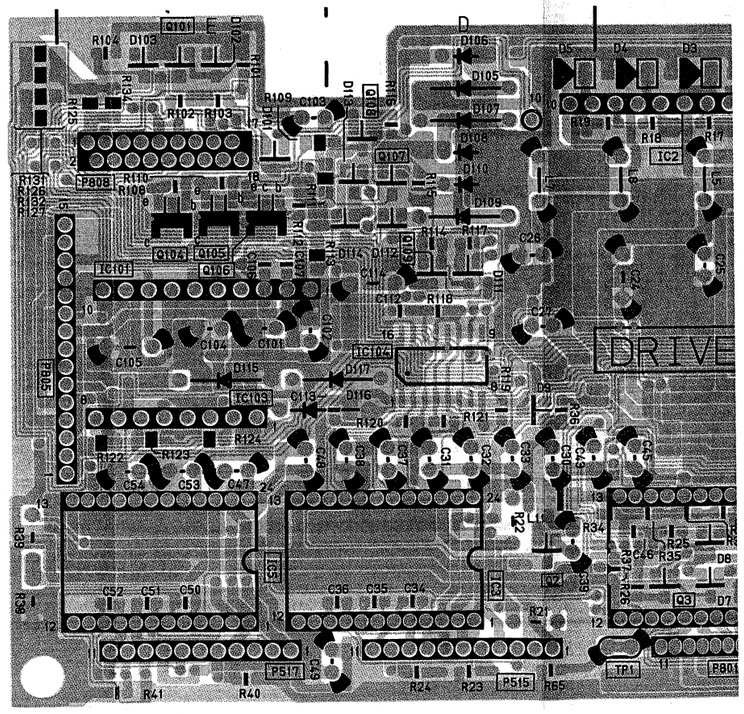

FOIL SIDE

DRIVER C. B. A.							
Integrated Circuits		P1515	D-3 Ⓒ	Q1101	E-1 Ⓕ
IC1001	B-1 Ⓒ	P1515	D-3 Ⓕ	Q1102	B-2 Ⓒ
IC1001	B-1 Ⓕ	P1517	E-3 Ⓒ	Q1102	B-2 Ⓕ
IC1002	C-1 Ⓒ	P1517	E-3 Ⓕ	Q1103	B-2 Ⓕ
IC1002	C-1 Ⓕ	P1518	A-2 Ⓒ	Q1104	E-1 Ⓕ
IC1003	D-3 Ⓒ	P1518	A-2 Ⓕ	Q1105	E-1 Ⓕ
IC1003	D-3 Ⓕ	P1801	C-3 Ⓒ	Q1106	E-1 Ⓕ
IC1004	C-3 Ⓒ	P1801	C-3 Ⓕ	Q1107	D-1 Ⓕ
IC1004	C-3 Ⓕ	P1805	E-2 Ⓒ	Q1108	D-1 Ⓕ
IC1005	E-3 Ⓒ	P1805	E-2 Ⓕ	Q1109	D-1 Ⓕ
IC1005	E-3 Ⓕ	P1806	A-3 Ⓒ	Q1110	B-2 Ⓕ
IC1006	B-3 Ⓒ	P1806	A-3 Ⓕ	**Test Points**	
IC1007	B-3 Ⓕ	P1807	A-1 Ⓒ	TP1001	C-3 Ⓒ
IC1101	E-1 Ⓒ	P1807	A-1 Ⓕ	TP1001	C-3 Ⓕ
IC1101	E-1 Ⓕ	P1808	E-1 Ⓒ	TPG1001	A-2 Ⓒ
IC1102	B-2 Ⓕ	P1808	E-1 Ⓕ	TPG1001	A-2 Ⓕ
IC1103	E-2 Ⓒ	**Transistors**			
IC1103	E-2 Ⓕ	Q1001	C-1 Ⓕ		
IC1104	D-2 Ⓕ	Q1002	D-3 Ⓕ		
Connectors		Q1003	C-3 Ⓕ		
P1503	B-3 Ⓒ	Q1004	B-3 Ⓕ		
P1503	B-3 Ⓕ	Q1005	B-2 Ⓕ		

ADDRESS INFORMATION
Ⓒ...COMPONENT SIDE
Ⓕ...FOIL SIDE

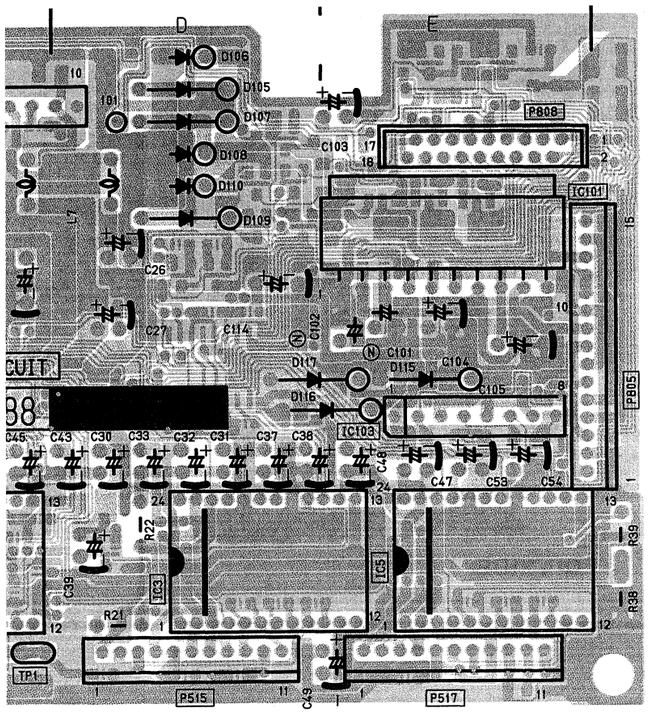

COMPONENT SIDE

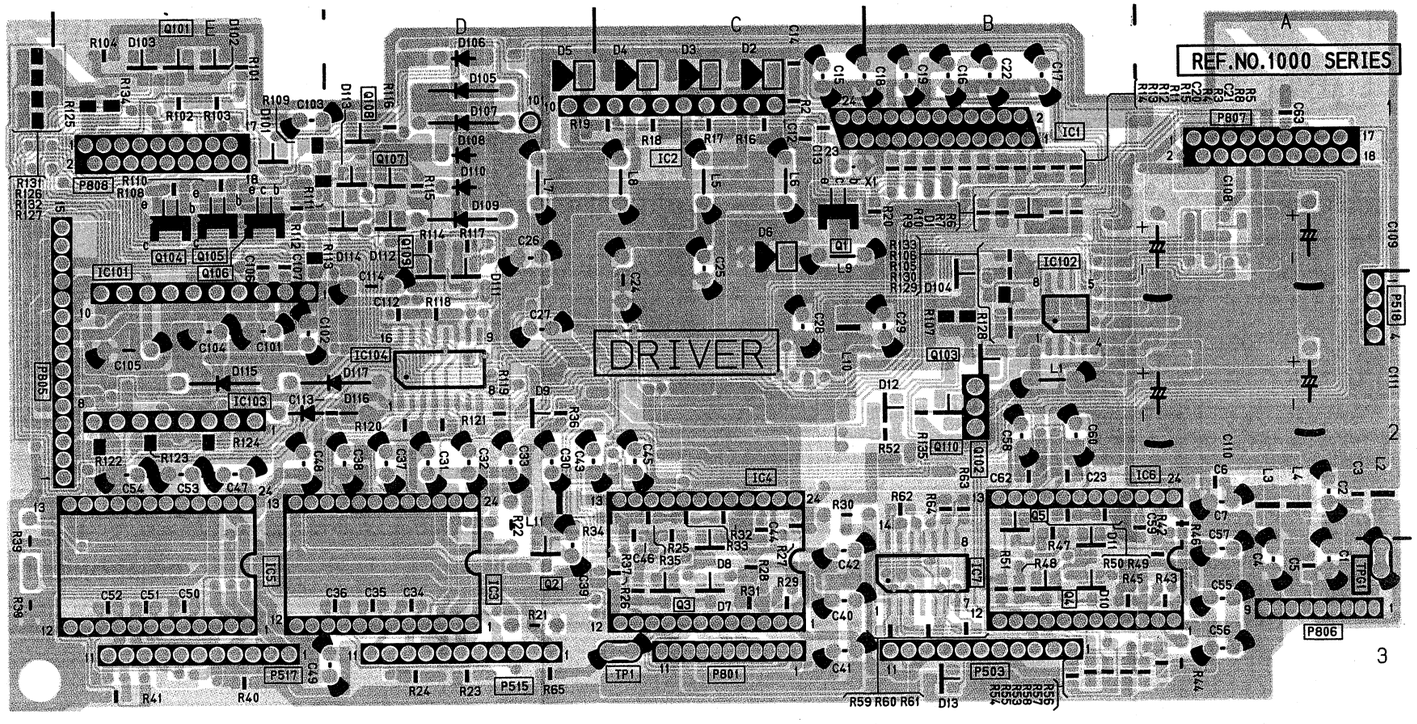

FOIL SIDE

REVERSE SIDE
SYSTEM CONTROL & TC

SYSTEM CONTROL & TC P.C. BOARD (VEP86114A) FOR NTSC
(VEP86114B) FOR PAL

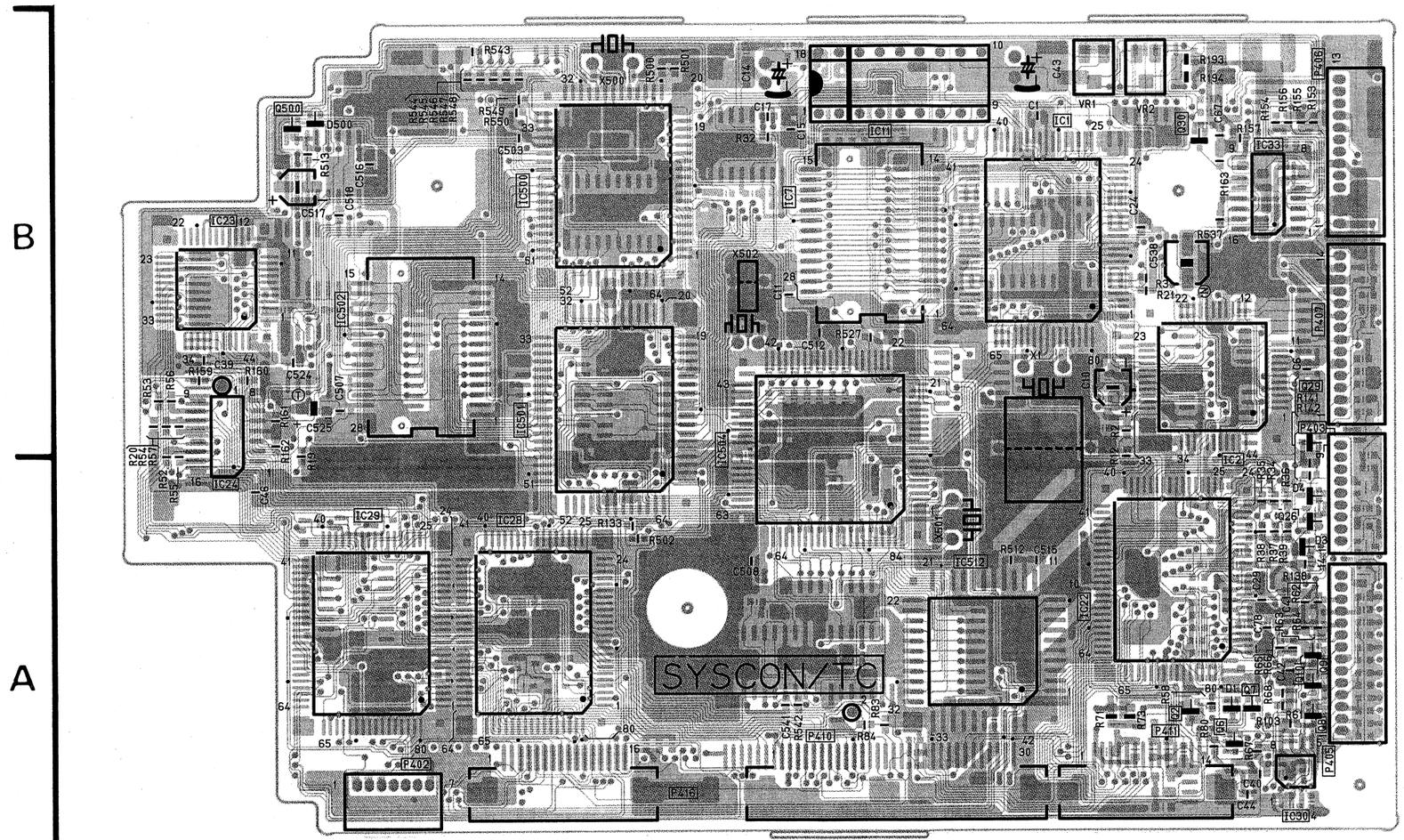

COMPONENT SIDE

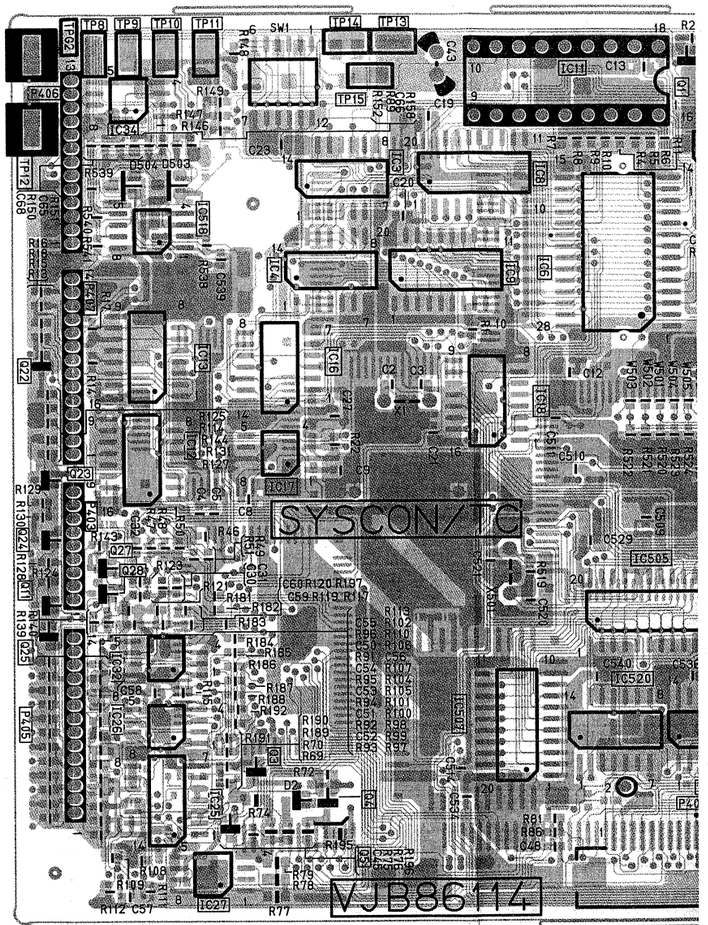

FOIL SIDE

B

A

1 2 3 4

FOR NTSC
FOR PAL

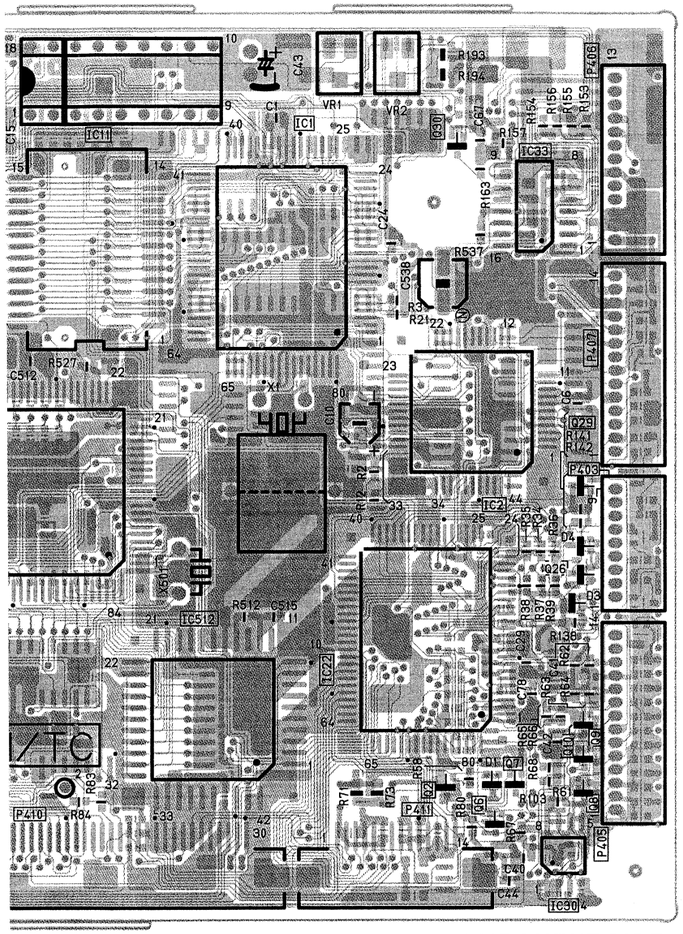

COMPONENT SIDE

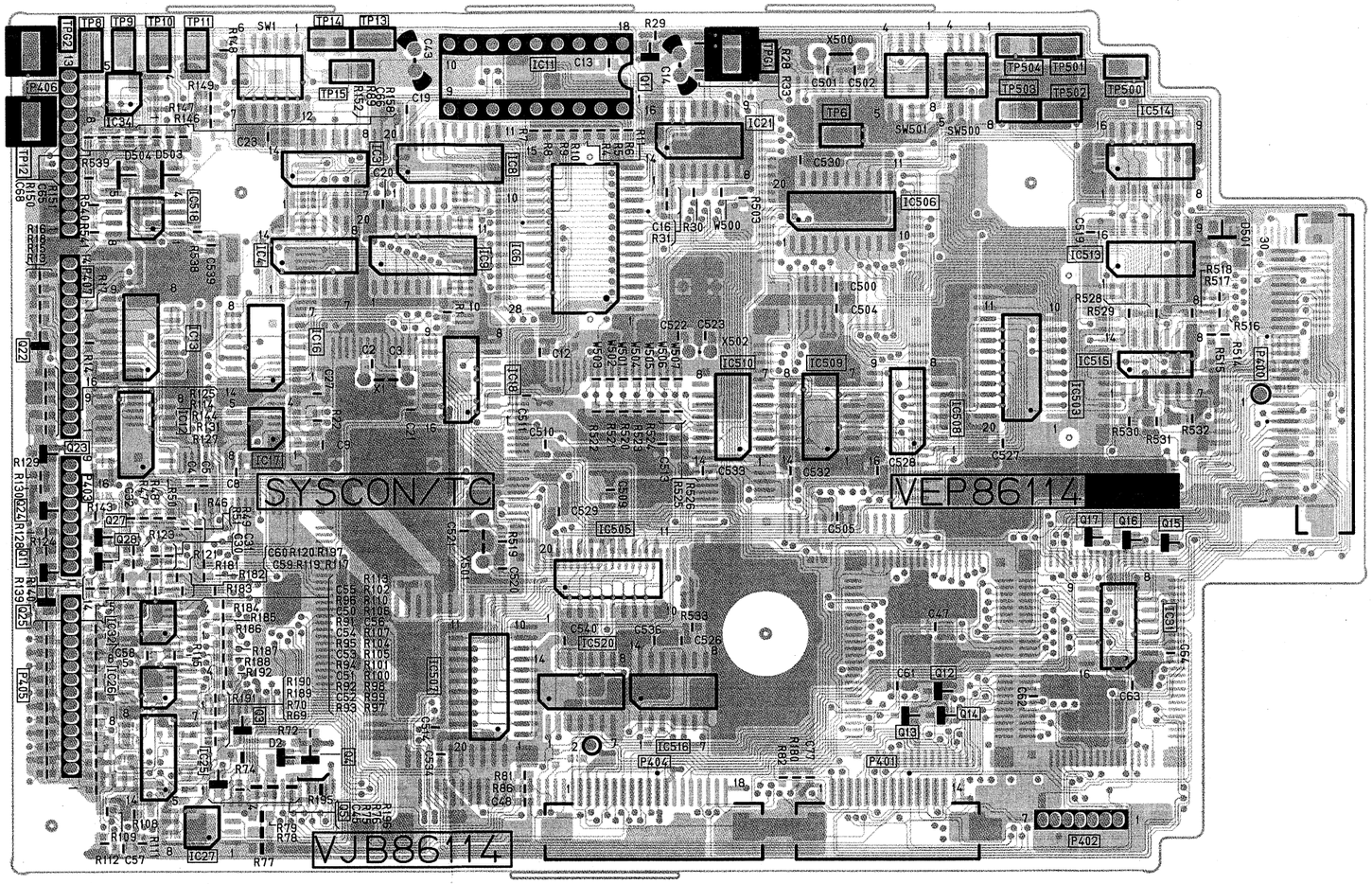

FOIL SIDE

3 4 5 6

FRONT P.C. BOARD (VEP86115A) FOR NTSC
(VEP86115B) FOR PAL

SYSCON & TC C. B. A.					
Integrated Circuits			P406	B-3	©
IC1	B-3	©	P406	B-4	Ⓕ
IC2	B-3	©	P407	B-3	©
IC3	B-4	Ⓕ	P407	B-4	Ⓕ
IC4	B-4	Ⓕ	P410	A-2	©
IC6	B-5	Ⓕ	P411	A-3	©
IC7	B-2	©	P416	A-2	©
IC8	B-5	Ⓕ	**Transistors**		
IC9	B-5	Ⓕ	Q1	B-5	Ⓕ
IC11	B-2	©	Q2	A-3	©
IC11	B-5	Ⓕ	Q3	A-4	Ⓕ
IC12	B-4	Ⓕ	Q4	A-4	Ⓕ
IC13	B-4	Ⓕ	Q5	A-4	Ⓕ
IC16	B-4	Ⓕ	Q6	A-3	©
IC17	B-4	Ⓕ	Q7	A-3	©
IC18	B-5	Ⓕ	Q8	A-3	©
IC21	B-5	Ⓕ	Q9	A-3	©
IC22	A-3	©	Q10	A-3	©
IC23	B-1	©	Q11	A-4	Ⓕ
IC24	B-1	©	Q12	A-6	Ⓕ
IC25	A-4	Ⓕ	Q13	A-6	Ⓕ
IC26	A-4	Ⓕ	Q14	A-6	Ⓕ
IC27	A-4	Ⓕ	Q15	A-6	Ⓕ
IC28	A-2	©	Q16	A-6	Ⓕ
IC29	A-1	©	Q17	A-6	Ⓕ
IC30	A-3	©	Q22	B-4	Ⓕ
IC31	A-6	Ⓕ	Q23	B-4	Ⓕ
IC32	A-4	©	Q24	A-4	©
IC33	B-3	©	Q25	A-4	©
IC34	B-4	©	Q26	A-3	©
IC500	B-2	©	Q27	A-4	Ⓕ
IC501	B-2	©	Q28	A-4	Ⓕ
IC502	B-1	©	Q29	B-3	©
IC503	B-6	Ⓕ	Q30	B-3	©
IC504	B-2	©	Q500	B-1	©
IC505	A-5	Ⓕ	**Switches**		
IC506	B-5	Ⓕ	SW1	B-4	Ⓕ
IC507	A-5	Ⓕ	SW500	B-6	Ⓕ
IC508	B-6	Ⓕ	SW501	B-6	Ⓕ
IC509	B-5	Ⓕ	**Test Points**		
IC510	B-5	Ⓕ	TP8	B-4	Ⓕ
IC512	A-3	©	TP10	B-4	Ⓕ
IC513	B-6	Ⓕ	TP11	B-4	Ⓕ
IC514	B-6	Ⓕ	TP13	B-4	Ⓕ
IC515	B-6	Ⓕ	TP14	B-4	Ⓕ
IC516	A-5	©	TP15	B-4	Ⓕ
IC518	B-4	©	TP500	B-6	Ⓕ
IC520	A-5	Ⓕ	TP501	B-6	Ⓕ
Connectors			TP504	B-6	Ⓕ
P400	B-6	Ⓕ	TPG1	B-5	Ⓕ
P401	A-5	Ⓕ	TPG2	B-4	Ⓕ
P402	A-1	©	**Adjustments**		
P402	A-6	Ⓕ	VR1	B-3	©
P403	A-3	©	VR2	B-3	©
P403	A-4	Ⓕ			
P404	B-5	Ⓕ			
P405	A-3	©			
P405	A-4	Ⓕ			

ADDRESS INFORMATION
©...COMPONENT SIDE
Ⓕ...FOIL SIDE

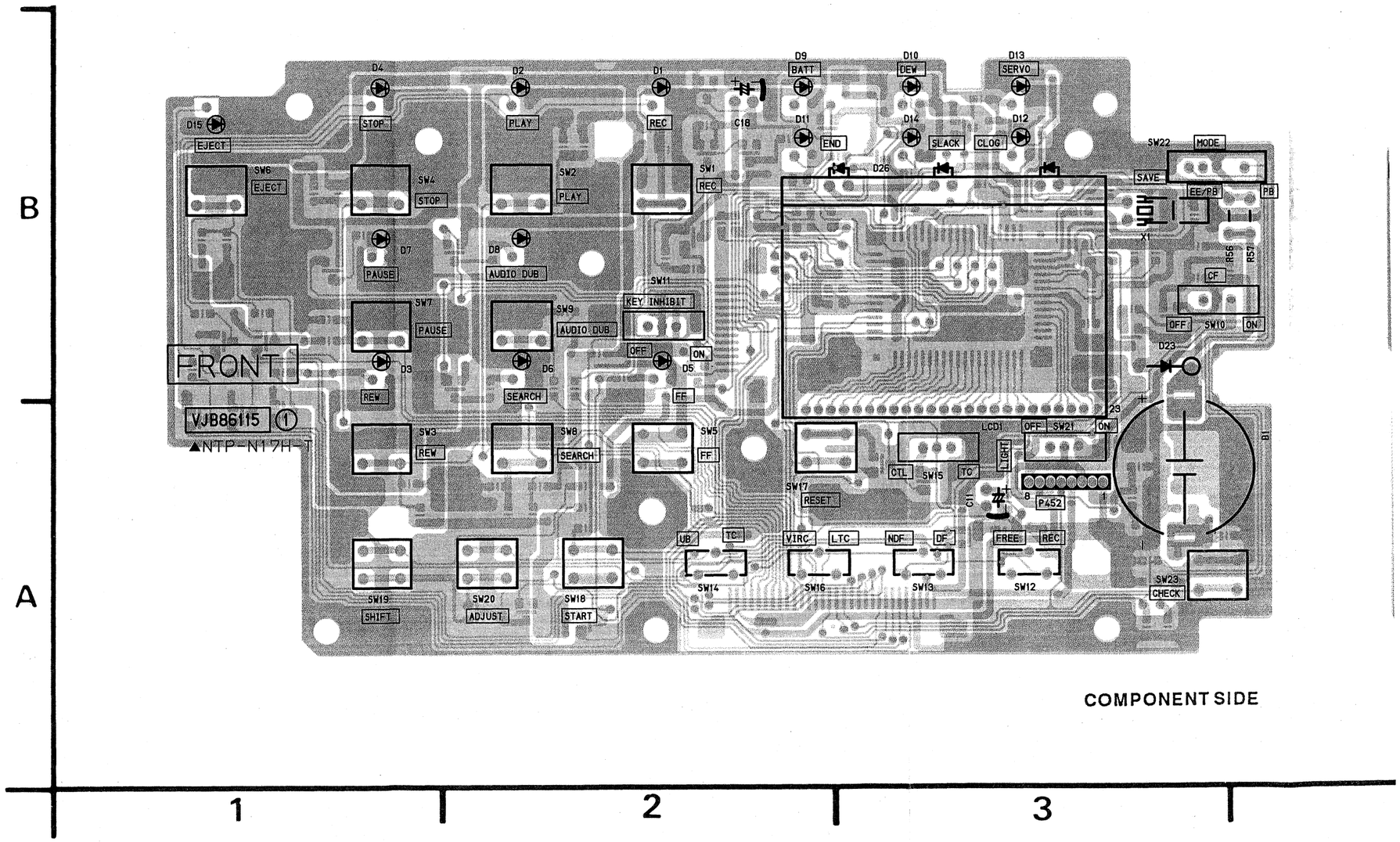

COMPONENT SIDE

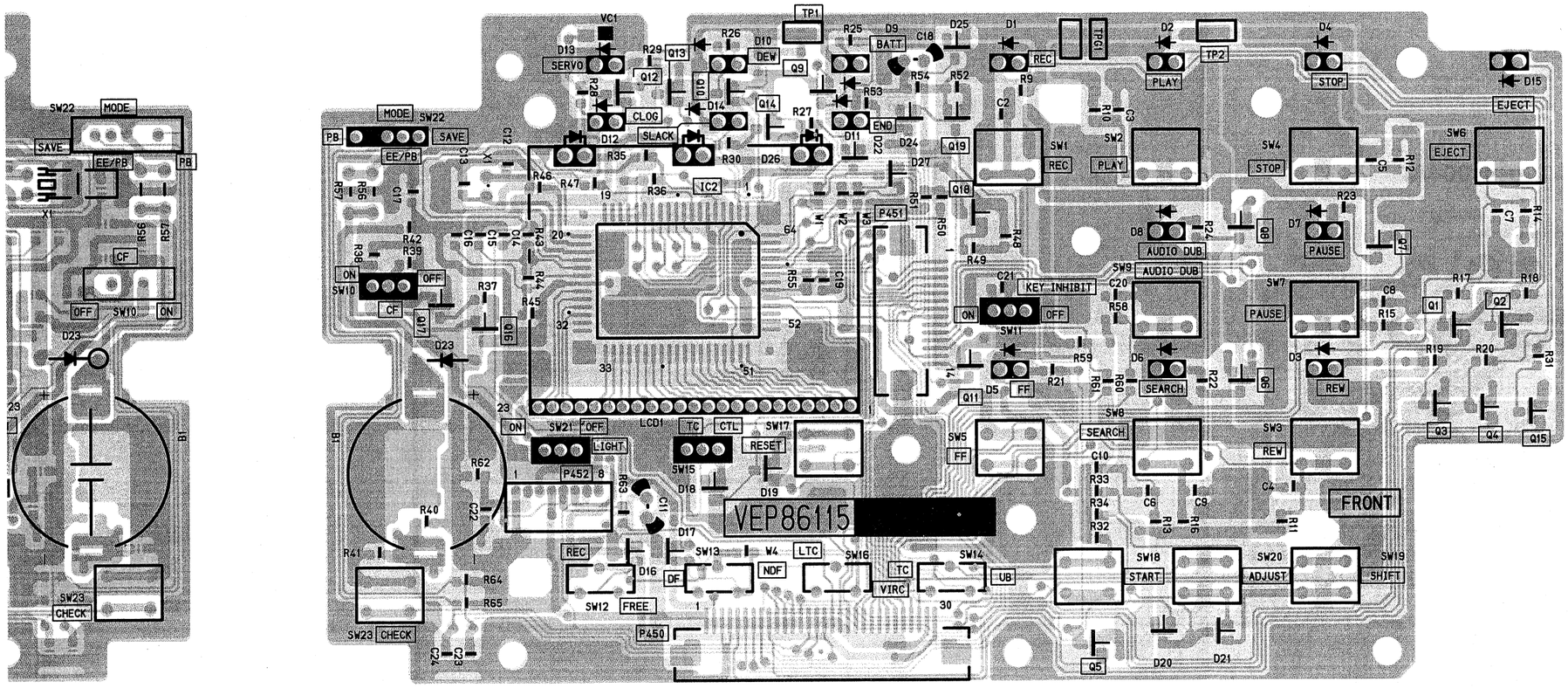

COMPONENT SIDE

FOIL SIDE

FRONT C. B. A.					
Batteries			SW6	B-1	©
B1	A-3	©	SW6	B-7	Ⓕ
B1	A-4	Ⓕ	SW7	B-1	©
Integrated Circuits			SW7	B-6	Ⓕ
IC2	B-5	Ⓕ	SW8	A-2	©
Connectors			SW8	A-6	Ⓕ
P450	A-5	Ⓕ	SW9	B-2	©
P451	B-5	Ⓕ	SW9	B-6	Ⓕ
Transistors			SW10	B-3	©
Q1	B-6	Ⓕ	SW10	B-4	Ⓕ
Q2	B-7	Ⓕ	SW11	B-2	©
Q3	A-6	Ⓕ	SW11	B-5	Ⓕ
Q4	A-7	Ⓕ	SW12	A-3	©
Q5	A-6	Ⓕ	SW12	A-5	Ⓕ
Q6	B-6	Ⓕ	SW13	A-3	©
Q7	B-6	Ⓕ	SW13	A-5	Ⓕ
Q8	B-6	Ⓕ	SW14	A-2	©
Q9	B-5	Ⓕ	SW14	A-5	Ⓕ
Q10	B-5	Ⓕ	SW15	A-3	©
Q11	B-5	Ⓕ	SW15	A-5	Ⓕ
Q12	B-5	Ⓕ	SW16	A-2	©
Q13	B-5	Ⓕ	SW16	A-5	Ⓕ
Q14	B-5	Ⓕ	SW17	A-2	©
Q15	A-7	Ⓕ	SW17	A-5	Ⓕ
Q16	B-4	Ⓕ	SW18	A-1	©
Q17	B-4	Ⓕ	SW18	A-6	Ⓕ
Q18	B-5	Ⓕ	SW19	A-1	©
Q19	B-5	Ⓕ	SW19	A-6	Ⓕ
Switches			SW20	A-2	©
SW1	B-2	©	SW20	A-6	Ⓕ
SW1	B-5	Ⓕ	SW21	A-3	©
SW2	B-2	©	SW21	A-4	Ⓕ
SW2	B-6	Ⓕ	SW22	B-3	©
SW3	A-1	©	SW22	B-4	Ⓕ
SW3	A-6	Ⓕ	SW23	A-3	©
SW4	B-1	©	SW23	A-4	Ⓕ
SW4	B-6	Ⓕ	**Test Points**		
SW5	A-2	©	TP1	B-5	Ⓕ
SW5	A-5	Ⓕ	TPG1	B-6	Ⓕ
			Adjustments		
			VC1	B-5	Ⓕ

ADDRESS INFORMATION
©...COMPONENT SIDE
Ⓕ...FOIL SIDE

MECH I/F 1 P.C. BOARD (VEP89004A)/MECH I/F 2 P.C. BOARD (VEP89005A)

MECH I/F 2 P.C. BOARD (VEP89005A)

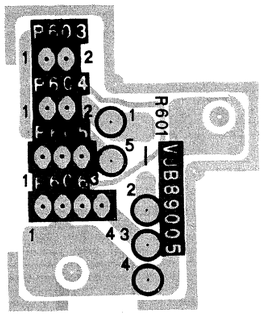

MECH I/F 1 P.C. BOARD (VEP89004A)

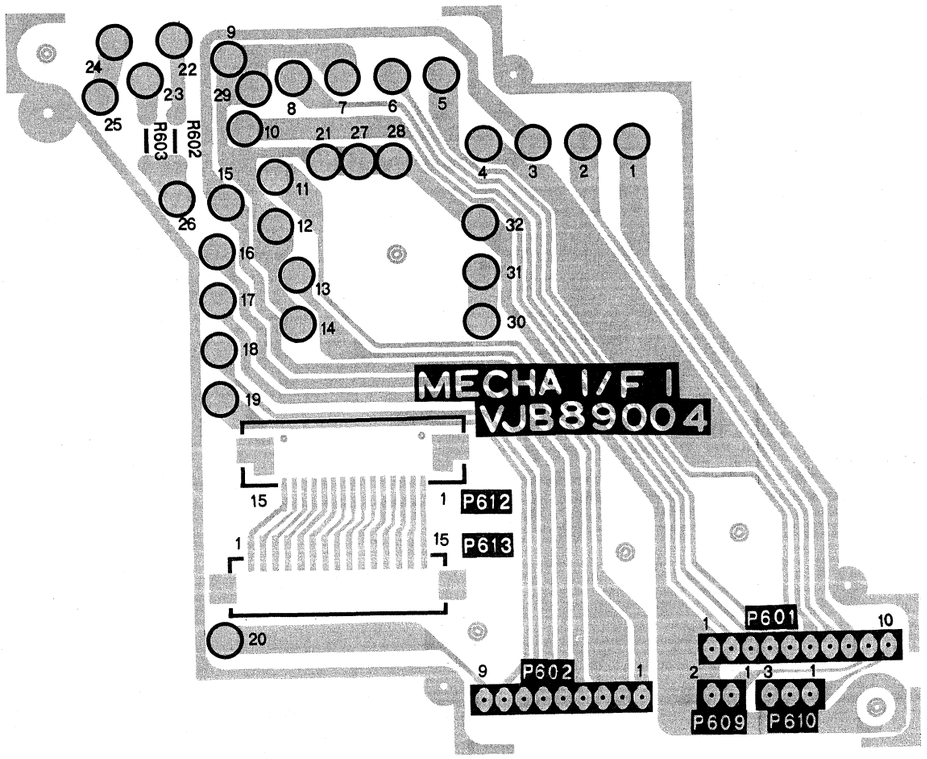

JACK C. B. A.	
Integrated Circuits	
IC1	B-2 ©
IC2	B-2 ©
Connectors	
P901	B-2 ©
P901	B-4 Ⓕ
P903	A-1 ©
P903	A-5 Ⓕ
P904	A-1 ©
P904	A-5 Ⓕ
P905	B-1 ©
P905	B-5 Ⓕ
P906	A-1 ©
P906	A-5 Ⓕ
P907	A-2 ©
P907	A-4 Ⓕ
P908	A-2 ©
P908	A-4 ©
P909	B-2 ©
P909	B-4 Ⓕ
P910	B-3 ©
P910	B-3 Ⓕ
P911	B-2 ©
P911	B-3 Ⓕ
P912	B-2 ©
P912	B-4 Ⓕ
P913	B-2 ©
P913	B-4 ©
P915	A-2 ©
P915	A-4 Ⓕ
Transistors	
Q1	B-1 ©
Q2	B-1 ©
Q3	A-1 ©
Q4	B-1 ©
Q5	B-3 ©
Switches	
SW1	A-2 ©
SW1	A-4 Ⓕ
SW2	B-1 ©
SW2	B-4 Ⓕ
SW3	B-2 ©
SW3	B-4 Ⓕ
SW4	B-1 ©
SW4	B-5 Ⓕ
Adjustments	
VR1	B-2 ©
VR1	B-4 Ⓕ
VR2	B-2 ©
VR2	B-4 Ⓕ
VR3	B-2 ©
VR3	B-4 Ⓕ

ADDRESS INFORMATION
©...COMPONENT SIDE
Ⓕ...FOIL SIDE

VIDEO JACK P.C. BOARD (VEP8
(VEP8

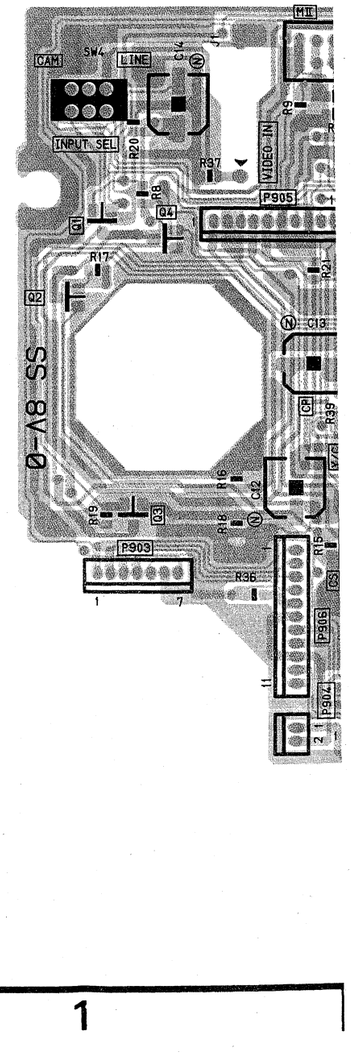

REVERSE SIDE
FRONT

CK P.C. BOARD (VEP83164A) FOR NTSC
(VEP83164B) FOR PAL

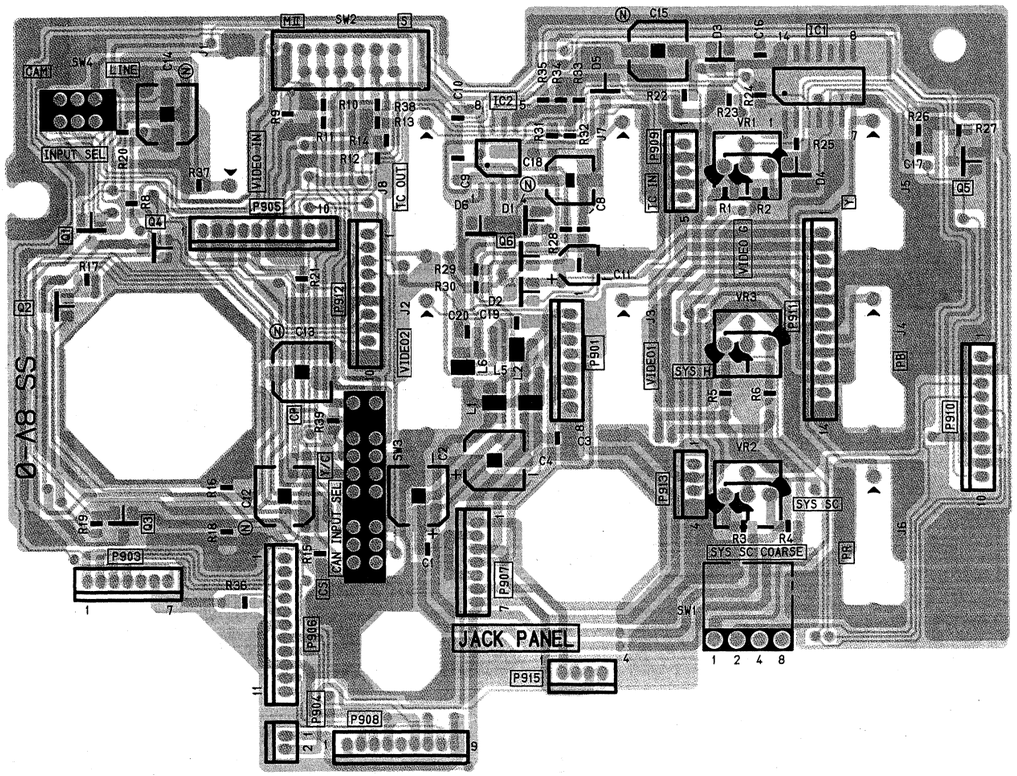

VJB83164 ① VEP83164

COMPONENT SIDE

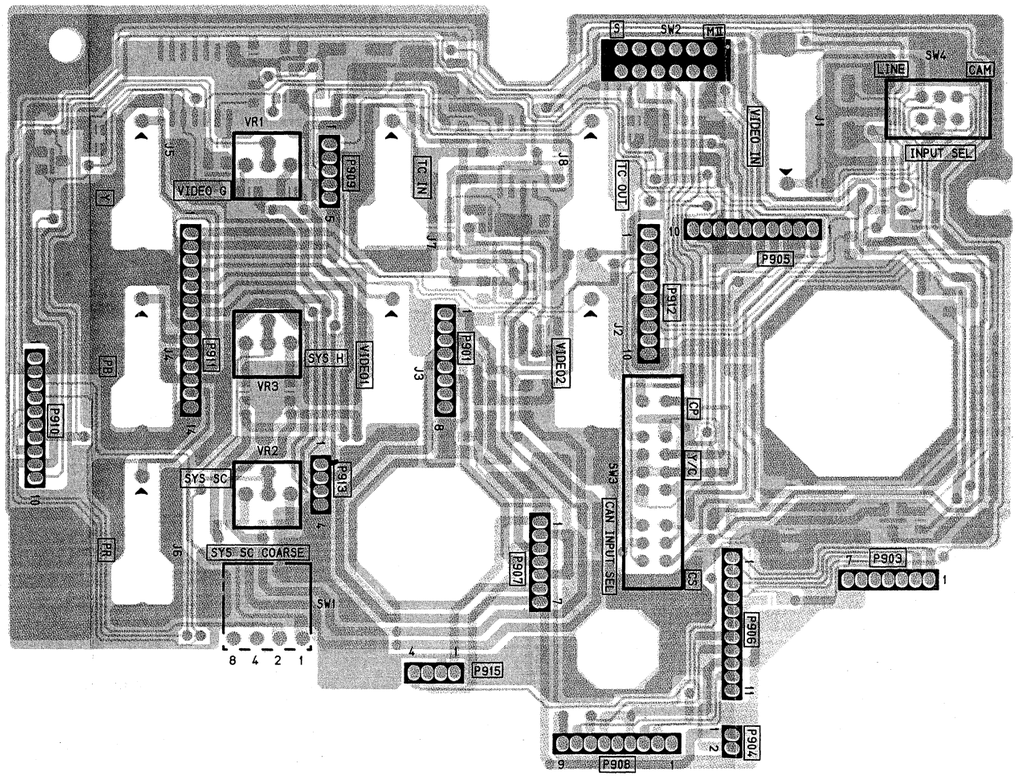

JACK PANEL

FOIL SIDE

1 2 3 4 5

POWER P.C. BOARD (VEP81065A)

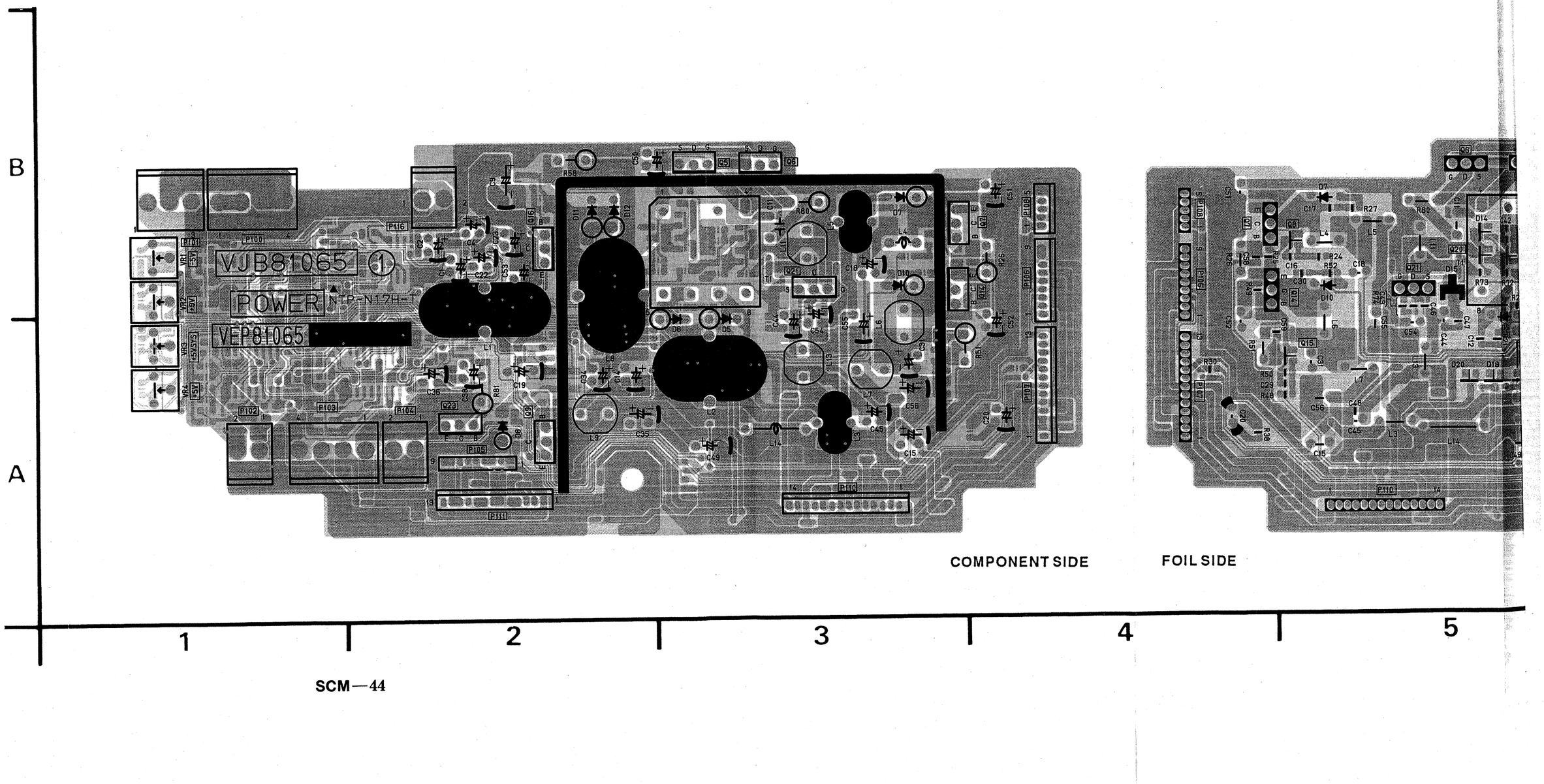

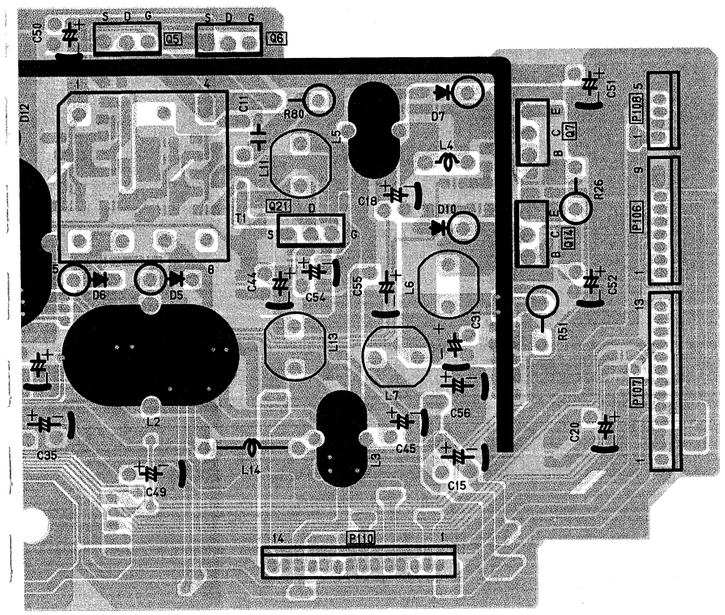

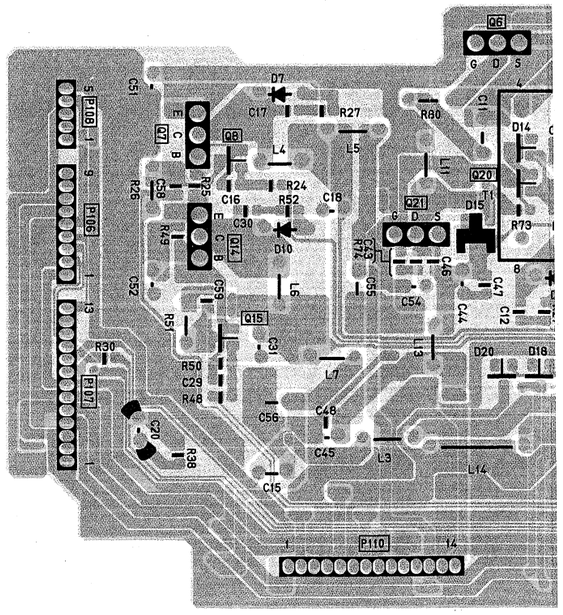

COMPONENT SIDE FOIL SIDE

3 4 5

WAVEFORMS FOR SERVO BOARD

TEST POINT	TP1	TP3	TP4	TP6
INPUT SIGNAL	COLOR BAR	COLOR BAR	COLOR BAR	COLOR BAR
MODE	PLAY	PLAY	PLAY	PLAY
VOLTS/DIV.	500mV	2V	2V	2V
SEC/DIV.	10msec.	10msec.	10msec.	10msec.
WAVEFORM	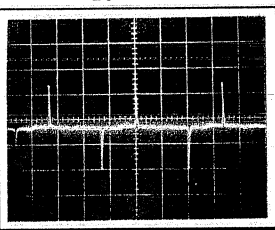	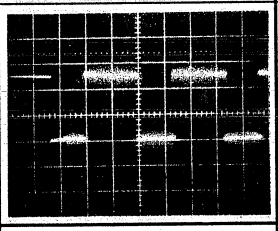	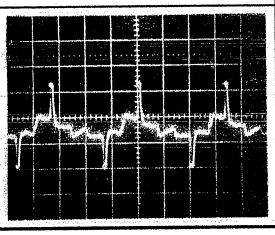	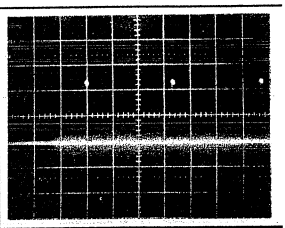
TEST POINT	TP7	TP8	TP9	TP10
INPUT SIGNAL	COLOR BAR	COLOR BAR	COLOR BAR	COLOR BAR
MODE	PLAY	PLAY	PLAY	PLAY
VOLTS/DIV.	2V	2V	2V	2V
SEC/DIV.	100 μ sec.	100 μ sec.	10msec.	5msec.
WAVEFORM	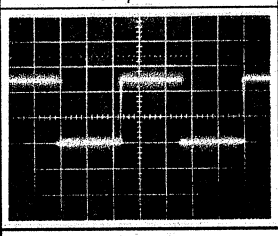	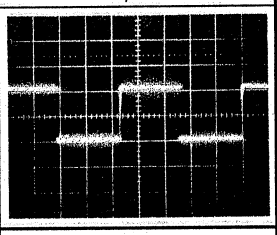	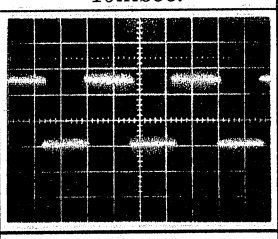	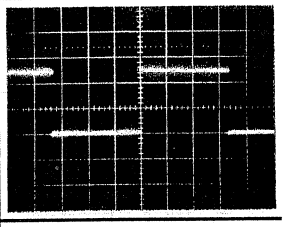
TEST POINT	TP18	TP19	TP20	
INPUT SIGNAL	COLOR BAR	COLOR BAR	COLOR BAR	
MODE	PLAY	PLAY	PLAY	
VOLTS/DIV.	100mV	2V	2V	
SEC/DIV.	10 μ sec.	10msec.	10msec.	
WAVEFORM	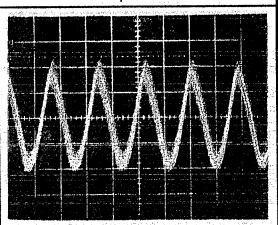	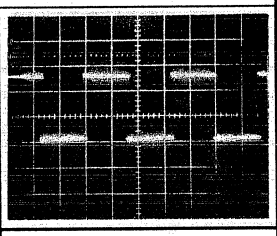	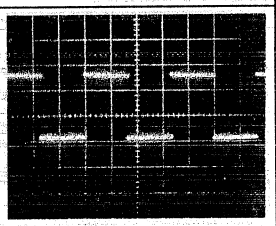	
TEST POINT				
INPUT SIGNAL				
MODE				
VOLTS/DIV.				
SEC/DIV.				
WAVEFORM				

WAVEFORMS FOR DECODER&CTCM BOARD

TEST POINT	TP1	TP41	TP206	TP401
INPUT SIGNAL	COLOR BAR	COLOR BAR	COLOR BAR	COLOR BAR
MODE	REC.	REC.	REC.	REC.
VOLTS/DIV.	100mV	500mV	200mV	2V
SEC/DIV.	20 μ sec.	20 μ sec.	20 μ sec.	10msec.
WAVEFORM	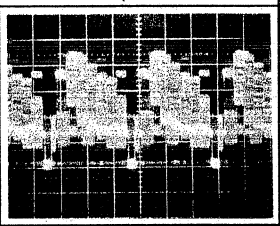	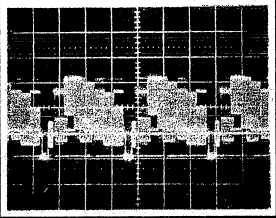	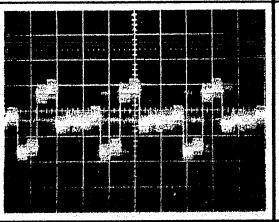	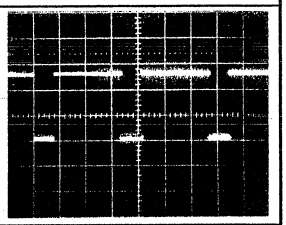
TEST POINT	TP403	TP408	TP432	TP501
INPUT SIGNAL	COLOR BAR	COLOR BAR	COLOR BAR	COLOR BAR
MODE	REC.	REC.	REC.	REC.
VOLTS/DIV.	2V	50mV	2V	100mV
SEC/DIV.	10msec.	20 μ sec.	5msec.	20 μ sec.
WAVEFORM	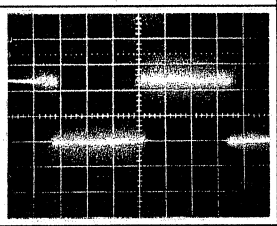	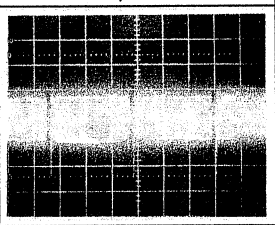	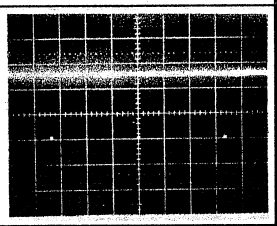	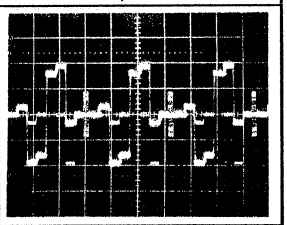
TEST POINT	TP502	TP504	TP591	TP601
INPUT SIGNAL	COLOR BAR	COLOR BAR	COLOR BAR	COLOR BAR
MODE	REC.	REC.	REC.	REC.
VOLTS/DIV.	200mV	200mV	200mV	200mV
SEC/DIV.	20 μ sec.	20 μ sec.	20 μ sec.	20 μ sec.
WAVEFORM	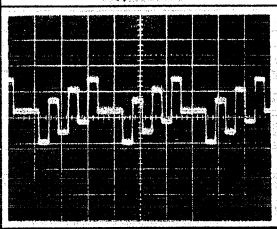	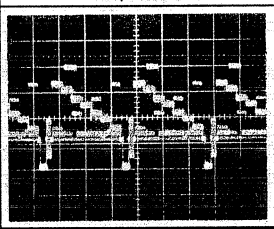	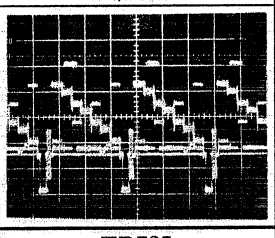	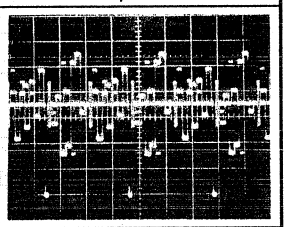
TEST POINT	TP704	TP723	TP725	
INPUT SIGNAL	COLOR BAR	COLOR BAR	COLOR BAR	
MODE	REC.	REC.	REC.	
VOLTS/DIV.	5V	2V	2V	
SEC/DIV.	0.1 μ sec.	20 μ sec.	20 μ sec.	
WAVEFORM	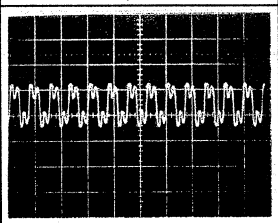	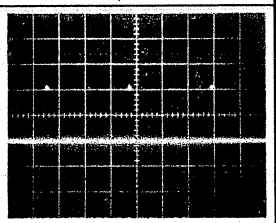	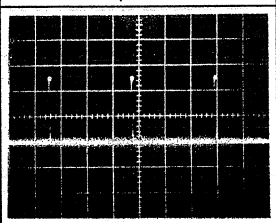	

These waveforms are measured by the NTSC system and the main difference between NTSC and PAL is the period of V rate and H rate as follows. NTSC: V 16.67 msec H 63.6 μsec

PAL : V 20 msec H 64 μsec

WAVEFORMS FOR VIDEO 1 BOARD

TEST POINT	TP1	TP2	TP3	TP5
INPUT SIGNAL	COLOR BAR	COLOR BAR	COLOR BAR	COLOR BAR
MODE	REC.	REC.	REC.	REC.
VOLTS/DIV.	200mV	500mV	200mV	200mV
SEC/DIV.	20 μsec.	20 μsec.	20 μsec.	20 μsec.
WAVEFORM	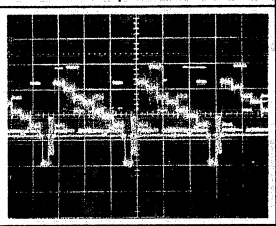	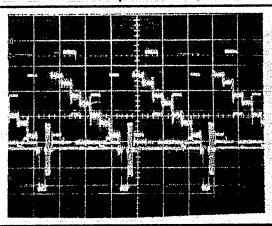	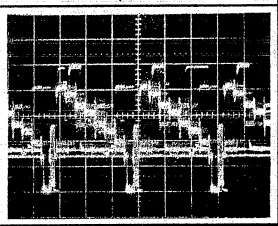	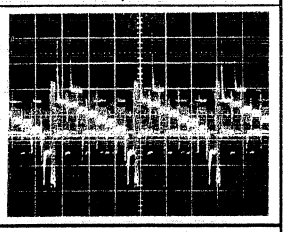
TEST POINT	TP7	TP8	TP9	TP10
INPUT SIGNAL	COLOR BAR	COLOR BAR	COLOR BAR	COLOR BAR
MODE	REC.	REC.	REC.	REC.
VOLTS/DIV.	500mV	2V	500mV	200mV
SEC/DIV.	20 μsec.	20 μsec.	20 μsec.	20 μsec.
WAVEFORM	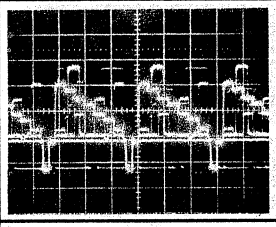	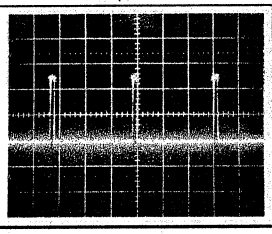	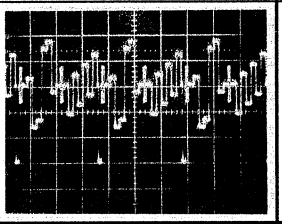	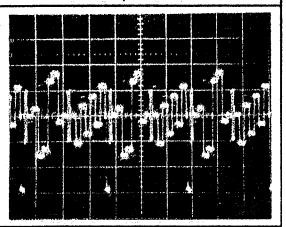
TEST POINT	TP12	TP13	TP16	TP17
INPUT SIGNAL	COLOR BAR	COLOR BAR	COLOR BAR	COLOR BAR
MODE	REC.	REC.	REC.	REC.
VOLTS/DIV.	2V	200mV	200mV	100mV
SEC/DIV.	20 μsec.	20 μsec.	5msec.	20 μsec.
WAVEFORM	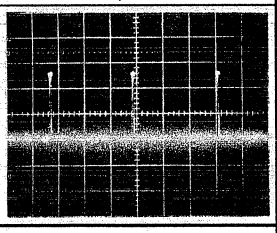	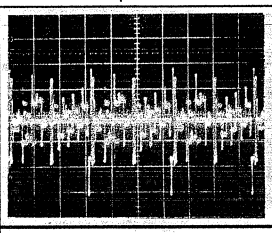	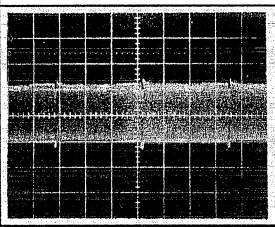	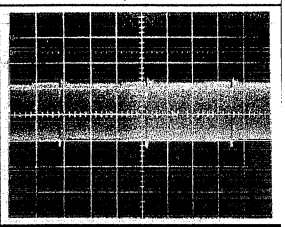
TEST POINT	TP18	TP19	TP20	TP21
INPUT SIGNAL	COLOR BAR	COLOR BAR	50% WHITE	50% WHITE
MODE	REC.	PLAY	PLAY	PLAY
VOLTS/DIV.	200mV	2V	200mV	200mV
SEC/DIV.	5msec.	5msec.	5msec.	5msec.
WAVEFORM	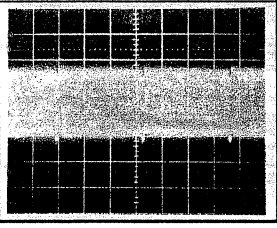	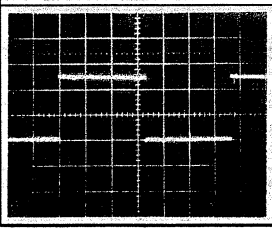	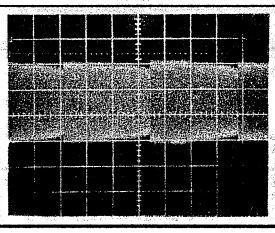	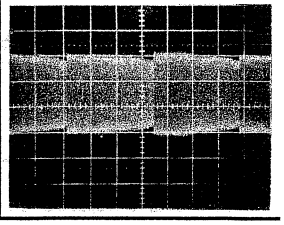

These waveforms are measured by the NTSC system and the main difference between NTSC and PAL is the period of V rate and H rate as follows. NTSC: V 16.67 msec H 63.6 μsec

PAL : V 20 msec H 64 μsec

WAVEFORMS FOR VIDEO 2 BOARD

TEST POINT	TP1	TP2	TP3	TP4
INPUT SIGNAL	COLOR BAR	COLOR BAR	COLOR BAR	RF SWEEP
MODE	PLAY	PLAY	PLAY	PLAY
VOLTS/DIV.	200mV	100mV	500mV	100mV
SEC/DIV.	5msec.	10msec.	10msec.	5msec.
WAVEFORM	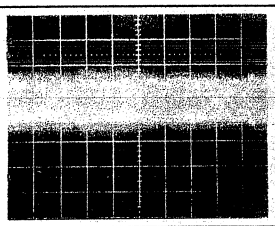	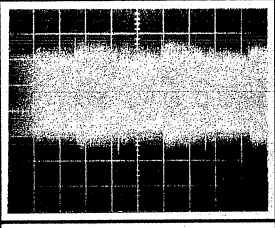	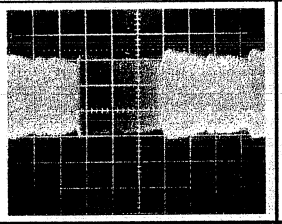	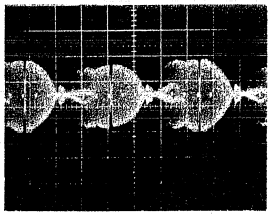
TEST POINT	TP5	TP6	TP7	TP9
INPUT SIGNAL	COLOR BAR	COLOR BAR	COLOR BAR	COLOR BAR
MODE	PLAY	PLAY	STILL	PLAY
VOLTS/DIV.	1V	1V	2V	500mV
SEC/DIV.	5msec.	5msec.	5msec.	5msec.
WAVEFORM	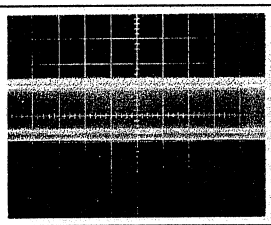	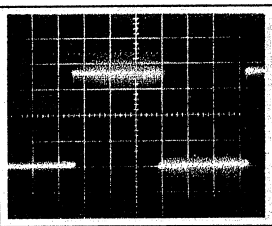	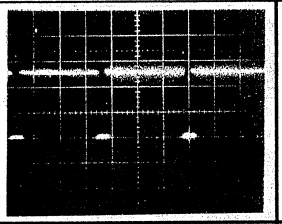	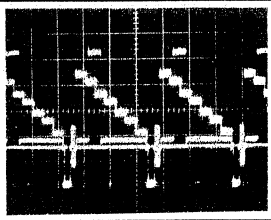
TEST POINT	TP11	TP12	TP13	TP14
INPUT SIGNAL	COLOR BAR	COLOR BAR	COLOR BAR	COLOR BAR
MODE	PLAY	PLAY	PLAY	PLAY
VOLTS/DIV.	500mV	200mV	200mV	100mV
SEC/DIV.	20 μ sec.	20 μ sec.	5msec.	5msec.
WAVEFORM	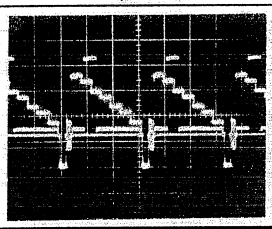	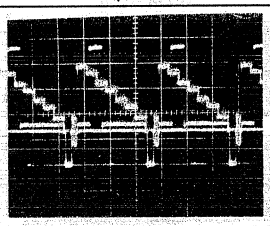	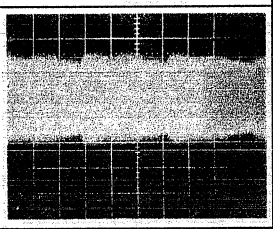	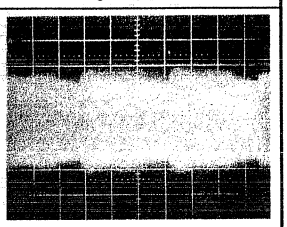
TEST POINT	TP15	TP16	TP18	TP19
INPUT SIGNAL	COLOR BAR	50% WHITE	COLOR BAR	COLOR BAR
MODE	PLAY	PLAY	PLAY	STILL
VOLTS/DIV.	500mV	100mV	2V	2V
SEC/DIV.	5msec.	0.1 μ sec.	5msec.	5msec.
WAVEFORM	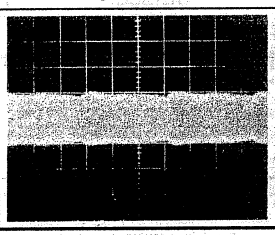	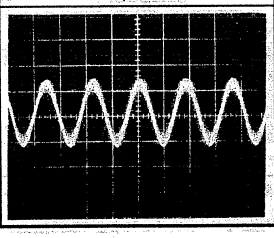	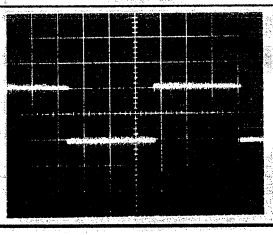	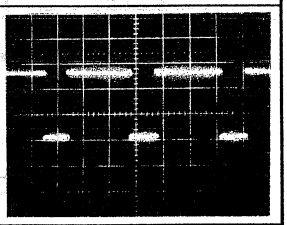

These waveforms are measured by the NTSC system and the main difference between NTSC and PAL is the period of V rate and H rate as follows. NTSC: V 16.67 msec H 63.6 µsec

PAL : V 20 msec H 64 µsec

TEST POINT	TP21	TP23		
INPUT SIGNAL	COLOR BAR	COLOR BAR		
MODE	PLAY	PLAY		
VOLTS/DIV.	500mV	200mV		
SEC/DIV.	20 μ sec.	20 μ sec.		
WAVEFORM	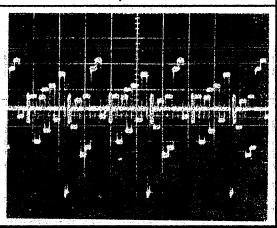	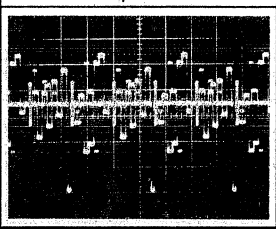		
TEST POINT				
INPUT SIGNAL				
MODE				
VOLTS/DIV.				
SEC/DIV.				
WAVEFORM				
TEST POINT				
INPUT SIGNAL				
MODE				
VOLTS/DIV.				
SEC/DIV.				
WAVEFORM				
TEST POINT				
INPUT SIGNAL				
MODE				
VOLTS/DIV.				
SEC/DIV.				
WAVEFORM				

These waveforms are measured by the NTSC system and the main difference between NTSC and PAL is the period of V rate and H rate as follows. NTSC: V 16.67 msec H 63.6 µsec

PAL : V 20 msec H 64 µsec

WAVEFORMS FOR VIDEO 3 BOARD

TEST POINT	TP201	TP203	TP205	TP207
INPUT SIGNAL	COLOR BAR	COLOR BAR	COLOR BAR	COLOR BAR
MODE	PLAY	PLAY	REC.	PLAY
VOLTS/DIV.	200mV	1V	2V	2V
SEC/DIV.	20 μ sec.	5msec.	20 μ sec.	0.1 μ sec.
WAVEFORM	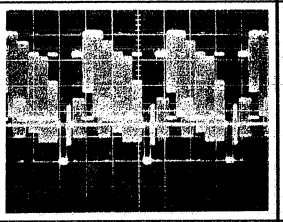	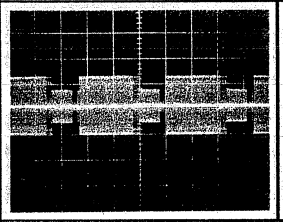	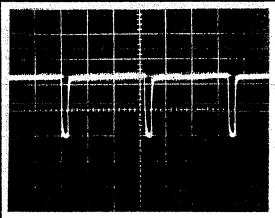	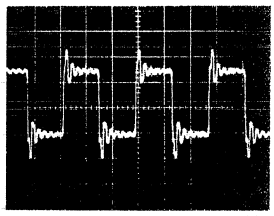
TEST POINT	TP209	TP210	TP211	TP702
INPUT SIGNAL	COLOR BAR	COLOR BAR	COLOR BAR	COLOR BAR
MODE	PLAY	PLAY	PLAY	PLAY
VOLTS/DIV.	2V	2V	2V	100mV
SEC/DIV.	5msec.	10msec.	10msec.	20 μ sec.
WAVEFORM	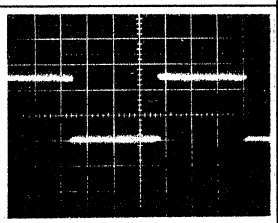	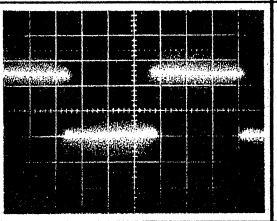	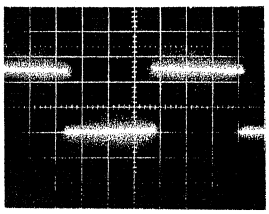	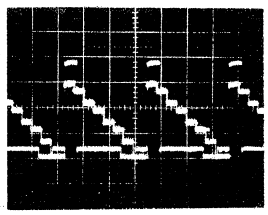
TEST POINT	TP703	TP704	TP801	TP802
INPUT SIGNAL	COLOR BAR	COLOR BAR	COLOR BAR	COLOR BAR
MODE	PLAY	PLAY	PLAY	PLAY
VOLTS/DIV.	500mV	500mV	1V	500mV
SEC/DIV.	20 μ sec.	20 μ sec.	5msec.	20 μ sec.
WAVEFORM	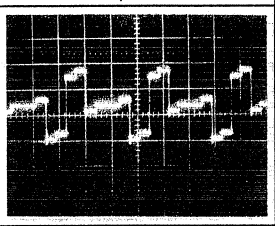	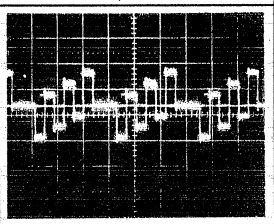	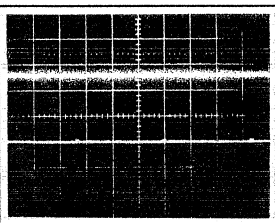	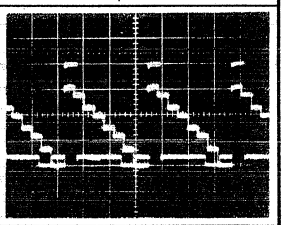
TEST POINT	TP805	TP806	TP812	
INPUT SIGNAL	COLOR BAR	COLOR BAR	COLOR BAR	
MODE	PLAY	PLAY	PLAY	
VOLTS/DIV.	500mV	500mV	500mV	
SEC/DIV.	20 μ sec.	20 μ sec.	20 μ sec.	
WAVEFORM	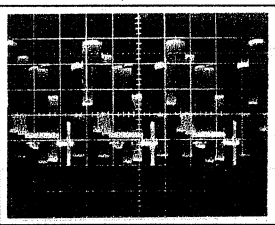	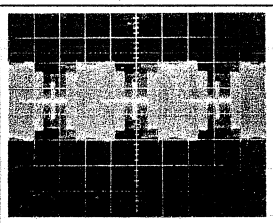	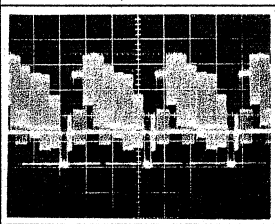	

These waveforms are measured by the NTSC system and the main difference between NTSC and PAL is the period of V rate and H rate as follows. NTSC: V 16.67 msec H 63.6 μsec

PAL : V 20 msec H 64 μsec

WAVEFORMS FOR VIDEO 4 BOARD

TEST POINT	TP51	TP52	TP53	TP54
INPUT SIGNAL	COLOR BAR	COLOR BAR	COLOR BAR	COLOR BAR
MODE	PLAY	PLAY	PLAY	PLAY
VOLTS/DIV.	200mV	200mV	500mV	500mV
SEC/DIV.	20 μ sec.	20 μ sec.	20 μ sec.	20 μ sec.
WAVEFORM	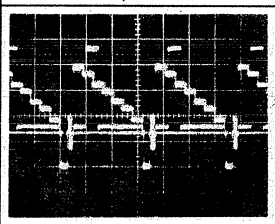	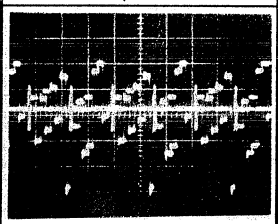	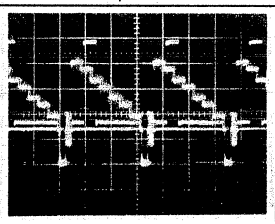	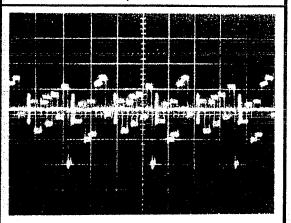
TEST POINT	TP57	TP58	TP501	TP502
INPUT SIGNAL	COLOR BAR	COLOR BAR	COLOR BAR	COLOR BAR
MODE	PLAY	PLAY	PLAY	PLAY
VOLTS/DIV.	2V	2V	2V	1V
SEC/DIV.	20 μ sec.	20 μ sec.	20 μ sec.	20 μ sec.
WAVEFORM	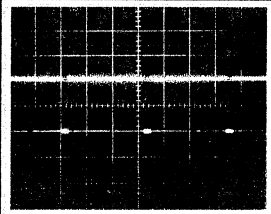	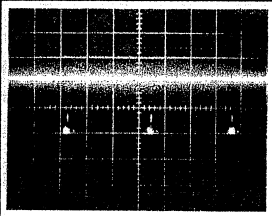	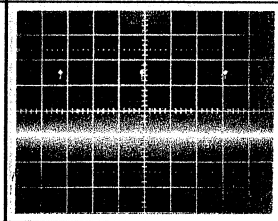	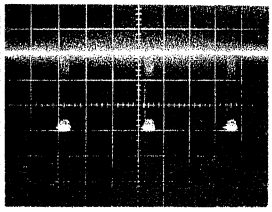
TEST POINT	TP503	TP504	TP505	TP507
INPUT SIGNAL	COLOR BAR	COLOR BAR	COLOR BAR	COLOR BAR
MODE	PLAY	PLAY	PLAY	PLAY
VOLTS/DIV.	2V	1V	2V	2V
SEC/DIV.	10 μ sec.	10 μ sec.	20 μ sec.	10 μ sec.
WAVEFORM	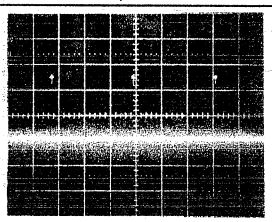	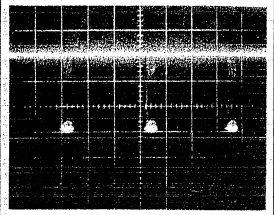	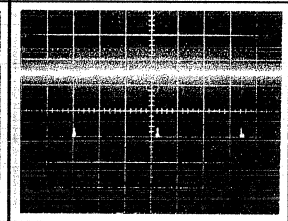	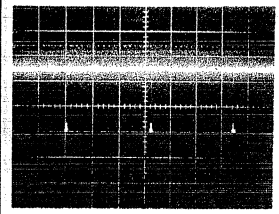
TEST POINT				
INPUT SIGNAL				
MODE				
VOLTS/DIV.				
SEC/DIV.				
WAVEFORM				

These waveforms are measured by the NTSC system and the main difference between NTSC and PAL is the period of V rate and H rate as follows. NTSC: V 16.67 msec H 63.6 μsec

PAL : V 20 msec H 64 μsec

WAVEFORMS FOR AUDIO BOARD

TEST POINT	TP101	TP201	TP902	
INPUT SIGNAL	COLOR BAR	COLOR BAR	COLOR BAR	
MODE	PLAY	PLAY	PLAY	
VOLTS/DIV.	200mV	200mV	200mV	
SEC/DIV.	0.5msec.	0.5msec.	5msec.	
WAVEFORM	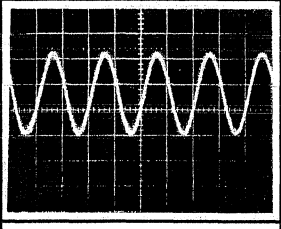	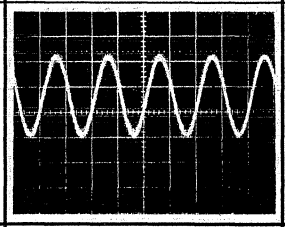	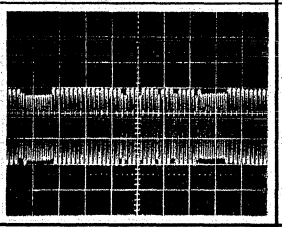	
TEST POINT				
INPUT SIGNAL				
MODE				
VOLTS/DIV.				
SEC/DIV.				
WAVEFORM				
TEST POINT				
INPUT SIGNAL				
MODE				
VOLTS/DIV.				
SEC/DIV.				
WAVEFORM				
TEST POINT				
INPUT SIGNAL				
MODE				
VOLTS/DIV.				
SEC/DIV.				
WAVEFORM				

WAVEFORMS FOR FRONT BOARD

TEST POINT	TP1			
INPUT SIGNAL	COLOR BAR			
MODE	PLAY			
VOLTS/DIV.	2V			
SEC/DIV.	0.5msec.			
WAVEFORM	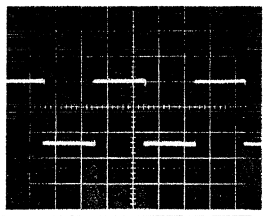			
TEST POINT				
INPUT SIGNAL				
MODE				
VOLTS/DIV.				
SEC/DIV.				
WAVEFORM				
TEST POINT				
INPUT SIGNAL				
MODE				
VOLTS/DIV.				
SEC/DIV.				
WAVEFORM				
TEST POINT				
INPUT SIGNAL				
MODE				
VOLTS/DIV.				
SEC/DIV.				
WAVEFORM				